ARTICLE IN PRESS

ICT Express xxx (xxxx) xxx

Contents lists available at ScienceDirect

ICT Express

journal homepage: www.elsevier.com/locate/icte

Artificial intelligence for estimating State of Health and Remaining Useful Life of EV batteries: A systematic review

Md Shahriar Nazim[1], Arbil Chakma[1], Md. Ibne Joha, Syed Samiul Alam, Md Minhazur Rahman, Miftahul Khoir Shilahul Umam, Yeong Min Jang *

Department of Electronics Engineering, Kookmin University, Seoul 02707, South Korea

ARTICLE INFO

Keywords:
Artificial intelligence
Battery health
Deep learning
Machine learning
Remaining Useful Life (RUL) prediction
State of Health (SOH) estimation

ABSTRACT

Lithium-ion batteries are critical to electric vehicles (EVs) but degrade over time, requiring accurate State of Health (SOH) and Remaining Useful Life (RUL) estimation. This review examines recent AI-based methods, especially Convolutional and Recurrent Neural Networks, for their effectiveness in prediction. It discusses key optimization strategies such as feature selection, parameter tuning, and transfer learning. Public datasets (NASA, CALCE, Oxford) are evaluated for benchmarking. The paper also assesses model complexity, performance metrics, and deployment challenges. Finally, it outlines future directions for improving battery management systems, supporting more efficient, reliable, and scalable integration into real-world EV applications.

1. Introduction

The significance of lithium-ion batteries (LIBs) has grown substantially in recent decades as they have become essential to the pursuit of sustainable and environmentally friendly energy solutions. Demand for these electrochemical devices has surged, particularly in the electric transportation sector. In the near future, several types of electric vehicles (EVs), as well as prototype electric ships and airplanes, are expected to depend heavily on LIBs, which further solidifies their role as a key electrical energy storage technology [1,2]. The widespread adoption of LIBs can be attributed to their superior properties, which include high energy density, low self-discharge rates, and extended operational lifespans [3,4]. Because of these distinguishing features, LIBs are thought to be particularly well-suited for applications that require efficient and long-lasting energy storage. It is well established that the efficacy of EVs depends directly on the optimal performance of their LIB systems, which is achieved through advanced smart battery management systems (BMS) technology. A well-designed, intelligent BMS is considered important for assuring the reliable, safe, and efficient functioning of EVs [5]. Such technologies have been shown to play an important role in maximizing battery performance, increasing operational lifespan, and improving the overall safety profile of EVs [6,7]. Nevertheless, LIBs are still susceptible to certain safety concerns that may lead to battery failure or performance deterioration [8].

Furthermore, the performance of these batteries tends to decline due to various factors, including aging, repeated charge–discharge cycles, and fluctuations in operating temperature [9]. Consequently, it is desirable to continuously assess both the current health status of the battery and its remaining useful life (RUL). The state of health (SOH) parameter serves as a key indicator of a battery's current condition. It is quantified as the ratio between the battery's actual capacity and its nominal capacity [10].

This metric provides valuable insights into the battery's performance relative to its original specifications. Complementing SOH, RUL is another critical parameter in battery management. RUL is defined as the projected time or number of cycles remaining before the battery's SOH reaches 0% [11]. This predictive measure is essential for effective maintenance scheduling, replacement planning, and optimizing the overall lifecycle management of LIBs in various applications. Until now, many studies have been conducted to estimate battery SOH and RUL from different perspectives. All of those proposed methods can be divided into two general classes: direct methods and indirect methods. The direct methods are the simplest and most accurate methods to estimate SOH and RUL. These approaches rely on highly accurate measurements of the open-circuit voltage (OCV), the current, and impedance [12]. Because those methods require precise data to estimate battery SOH and RUL, they lead to increased experimental costs and often necessitate additional experiments for different use cases [13].

On the other hand, indirect methods estimate SOH and RUL by using other directly measurable battery parameters. They can be divided

* Corresponding author.
E-mail address: yjang@kookmin.ac.kr (Y.M. Jang).
[1] This author contributed equally and shared the first authorship.

https://doi.org/10.1016/j.icte.2025.05.013
Received 12 March 2025; Received in revised form 26 May 2025; Accepted 30 May 2025
Available online 28 June 2025
2405-9595/© 2025 Published by Elsevier B.V. on behalf of The Korean Institute of Communications and Information Sciences. This is an open access article under the CC BY-NC-ND license (http://creativecommons.org/licenses/by-nc-nd/4.0/).

Please cite this article as: Md Shahriar Nazim et al., *ICT Express,* https://doi.org/10.1016/j.icte.2025.05.013

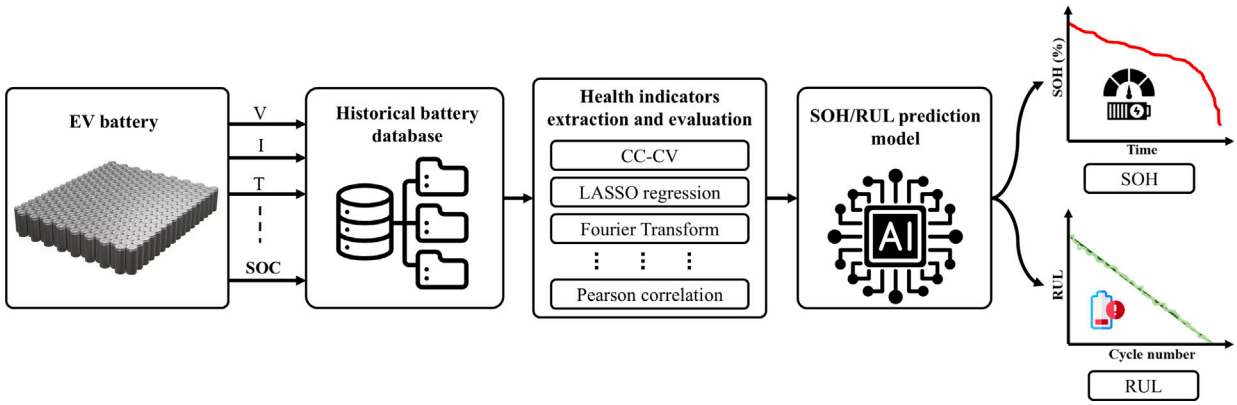

Fig. 1. A systematic workflow for AI-based EV battery SOH and RUL estimation.

into two subcategories: model-based and data-driven methods [13]. Model-based approaches are used to represent the battery's internal operating mechanisms, such as Li-ion diffusion, the average radius of solid particles, and the charge dynamics of negative electrode materials. In some cases, they also translate chemical properties into equivalent electrical properties. Based on those approaches, several degradation models were proposed, such as the Arrhenius model, Peukert's law, the capacity fade model, the Doyle–Fuller–Newman model, semi-empirical aging model, which estimate SOH and RUL, but most of them rely on adaptive filters to estimate SOH and RUL [14]. The main problem with this approach is that both accuracy and reliability depend on the specific degradation model used. Moreover, this approach also requires prior knowledge of the physicochemical properties of the batteries, which are often affected by the disturbance, so that, sometimes, their real-world applicability is compromised [15].

In recent years, artificial intelligence (AI)-based approaches have gained significant traction for estimating battery health by modeling the relationship between measurable external signals, such as voltage, current, and temperature (commonly referred to as health indicators, HIs), and battery states like SOH and RUL, without relying on internal physicochemical modeling. Beyond the battery domain, AI has demonstrated its versatility in addressing a range of real-world challenges, including oil spill drift prediction through adversarial temporal convolutional networks [16], and energy forecasting applications [17, 18]. These examples underscore the broader applicability and potential of data-driven approaches in complex state estimation tasks. For SOH and RUL prediction specifically, data-driven models are typically categorized into three main groups: traditional machine learning models, neural networks, and advanced hybrid or deep learning-based frameworks [19].

Machine learning models like support vector machine (SVM), random forest (RF), auto regressor (AR), and Gaussian process regression (GPR) are the most common methods to estimate SOH and RUL. Those models mainly use different statistical/numerical approaches to find the SOH and RUL from the HIs and are very easy to use. In addition, different unsupervised models are being used for predicting battery SOH and RUL, like enhanced quantum clustering, time-varying dynamic linear autoregression [20], etc. Another data-driven approach for estimating SOH and RUL involves neural networks, which mimic the structure of neurons in the brain. Common techniques in this field include feed-forward neural networks (FFNNs), recurrent neural networks (RNNs), and convolutional neural networks (CNNs) [15]. On the other hand, several advanced data-driven approaches have been developed. For example, transfer learning (TF) utilizes pre-trained model parameters to train new models, which improves both training efficiency and accuracy. Hybrid models combine multiple SOH or RUL estimation techniques in a way that leverages the strengths of each method. In addition, encoder–decoder-based approaches, such as autoencoder and transformer models, are increasingly used for SOH and RUL estimation. Among these, hybrid models offer high accuracy and greater predictive power than other approaches. The systematic workflow for the AI-based battery SOH and RUL estimation process is shown in Fig. 1.

With the rapid advancement of AI-based methodologies for estimating the SOH and RUL of LIBs, there is a growing need for comprehensive and focused review studies that critically evaluate these approaches. However, as summarized in Table 1, such reviews remain relatively limited in scope and depth. Tian et al. [21] explored the causes of battery aging and presented SOH prediction methods within a classification-based framework. While their work provides valuable insights into degradation mechanisms and SOH estimation, it does not extend its scope to include RUL estimation, thereby limiting its applicability to lifecycle prediction tasks. Rauf et al. [22] also explored the relationship between battery degradation modeling and the estimation of SOH and RUL, providing a detailed overview of machine learning-based approaches for both tasks. However, their review does not cover several recent advancements in the field, such as transformer-based architectures and TF techniques, which are increasingly being adopted to enhance model performance. Additionally, their work lacks a comprehensive discussion on feature selection strategies and hyperparameter optimization methods, two critical aspects that significantly influence the accuracy and efficiency of AI-based models. Similarly, Elmahallawy et al. [12] offered an in-depth analysis of battery degradation mechanisms, including chemical and physical degradation pathways, and presented a broad overview of SOH and RUL estimation methods. Despite this, their study provides limited detail on advanced AI-driven models and omits coverage of recent trends that have shown promise in improving predictive accuracy, such as deep hybrid models and advanced learning frameworks.

Zhao et al. [13] conducted a comprehensive review encompassing State of Charge (SOC), SOH, and RUL estimation, discussing both traditional and AI-based approaches. However, their study provides limited insight into the specific AI techniques employed for SOH estimation and lacks discussion on specialized use cases relevant to battery state and RUL prediction under real-world scenarios. Similarly, Kim et al. [24] presented a detailed review covering SOC, SOH, and RUL estimation, along with an extensive summary of commonly used public battery degradation datasets and their respective applications. Their work also includes an overview of AI-based methods applied to these tasks. Despite their valuable contributions, the review falls short in covering recent advancements such as transformer-based models, explainable AI (XAI) techniques, and modern practices in feature selection and hyperparameter optimization, which are increasingly critical for improving the performance and interpretability of battery prognostics models. Alsuwian et al. [25], on the other hand, focused specifically on hybrid and expert-driven co-estimation frameworks for SOH and RUL. While their work offers valuable insights into rule-based and knowledge-driven methods, it overlooks the rapidly evolving landscape

Table 1
Summary of Review papers on Battery SOH and RUL.

Publications	Year	Topic	Content	Limitations
Tian et al. [21]	2020	SOH	Analyze the reasons behind the again of LIB, SOH prediction using classification framework, and the pros and cons of each model, which can be implemented in real industrial production.	Does not focus on AI-based approaches, especially advanced models for EV applications, and only focus on SOH estimation
Rauf et al. [22]	2021	SOH & RUL	Extensive review on the use of ML models in the field of SOH and RuL estimation techniques, analysis of different application-oriented models in terms of accuracy and computation.	Describe the ML-based approaches, but the literature is not up to date.
Elmahallawy et al. [12]	2022	SOH & RUL	Discussed different approaches proposed by researchers in past decades, along with machine learning-based approaches.	Describe the factors of battery degradation, lack of proper description of AI-based approaches.
Zhao et al. [13]	2023	SOC, SOH, & RUL	Provide a critical review of different approaches of estimating SOC and RUL and discuss their strengths and weaknesses.	Limited description of SOH and RUL estimation using AI and does not provide an in-depth description of the feature section and parameter optimization
Song et al. [23]	2023	RUL	Analysis of the RuL prediction using different fusion or hybrid models and safety at home and abroad.	Only described the hybrid approach for RUL estimation, lacking SOH estimation and other AI-based approaches.
Kim et al. [24]	2023	SOC, SOH, & RUL	Discussed different publicly available datasets in detail and analyzed different & data-driven hybrid models performance	Limited description of feature selection, parameter optimization, and AI-based approaches.
Alsuwian et al. [25]	2024	SOH, RUL	Provide analysis of different hybrid or combinational models emphasizing methodologies, executions, advantages, and disadvantages.	Only focus on expert hybrid system and co-estimation based approaches.
Li et. al. [26]	2025	SOH	Description about battery degradation process in terms of chemical sides and an overview of the SOH estimation process.	Only focus on SOH estimation and no description about RUL. Limited description about AI models, feature selection, optimization process, and no description about publicly available datasets.

of data-driven and deep learning models, which are increasingly gaining attention due to their predictive accuracy and scalability. A recent review by Li et al. [26] provides an overview of the degradation mechanisms in LIBs and discusses recent advancements in SOH estimation methods. However, the study does not address RUL prediction, feature selection techniques, hyperparameter optimization methods, or the commonly used datasets for model training, limiting its applicability for comprehensive AI-based prognostics.

Despite the growing interest in AI-driven approaches for battery prognostics, a significant gap remains in the literature regarding comprehensive reviews that simultaneously address both SOH and RUL estimation for EV batteries. In particular, limited attention has been paid to critical aspects such as feature selection methods and hyperparameter optimization techniques, which greatly influence model accuracy, robustness, and generalizability. This review seeks to bridge these gaps by systematically analyzing a broad spectrum of AI-based models, widely used publicly available datasets, feature selection strategies, and hyperparameter tuning approaches relevant to SOH and RUL estimation. Furthermore, this work extends beyond traditional evaluations by addressing practical considerations, including real-world deployment scenarios, handling of partial charging/discharging conditions, noise robustness, and model explainability. The key contributions of this review paper are summarized as follows:

- A detailed review of AI and ML-based techniques for SOH and RUL estimation is presented. Strategies for effective data handling, real-world representation, model robustness, and the application of TF in BMSs are highlighted.
- The inherent relationship between SOH and RUL is investigated, with co-estimation approaches being explored where capacity prediction is utilized to improve estimation accuracy. The importance of jointly modeling these parameters to improve system performance is emphasized.
- Advanced methods for SOH and RUL estimation are explored, including noisy-data handling, real-world scenario representation, cloud-vehicle collaboration models, and the integration of end-to-end estimation frameworks. The robustness and scalability of these approaches are evaluated.

The remainder of this review is structured as follows: Section 2 outlines the methodology for selecting relevant research papers. Section 3 defines the relationship between SOH and RUL, while Section 4 covers datasets, feature selection, and parameter optimization. Sections 5 and 6 review ML and deep learning research, and Sections 7 and 8 explore advanced AI models and co-estimation techniques. Finally, Sections 10 and 11 analyze past work and future directions, and Section 12 concludes the review.

2. Methodology

This review is based on a recent research paper (2020 to 2025) on AI for SOH and RUL estimation. For the research paper, three popular digital databases were selected: IEEE Xplore (IEEE), Web of Science (WOS), and ScienceDirect. IEEE Xplore was chosen for its extensive peer-reviewed technical literature in energy storage systems, especially in the field of battery and computer science, which offers both abstracts and full texts. WOS was selected for its multidisciplinary nature, covering art, social science, technology, and science, with an extensive repository of peer-reviewed technology articles. Lastly, ScienceDirect, one of the largest repositories for energy-storage-related literature, was included to ensure comprehensive coverage of battery SOH and RUL aspects. The collected research papers were filtered using PRISMA guidelines, which are shown in Fig. 2. These three databases are expected to provide valuable scientific insights into both battery SOH and RUL estimation using AI and form a balanced foundation for the review.

To identify specific literature, a comprehensive search string was formulated using the Boolean operators ‘AND’ and ‘OR’. The following search keywords were employed:

- IEEE Xplore: (“Abstract“:Electric Vehicle OR “Abstract”:EV) AND (“Abstract“:Battery) AND (“Abstract”:Deep Learning OR “Abstract“:Machine Learning OR “Abstract”:Artificial Intelligence OR “Abstract“:Neural Network) AND (“Abstract”:State of Health OR “Abstract“:SOH OR “Abstract”:Remaining Useful Life OR “Abstract”:RUL)

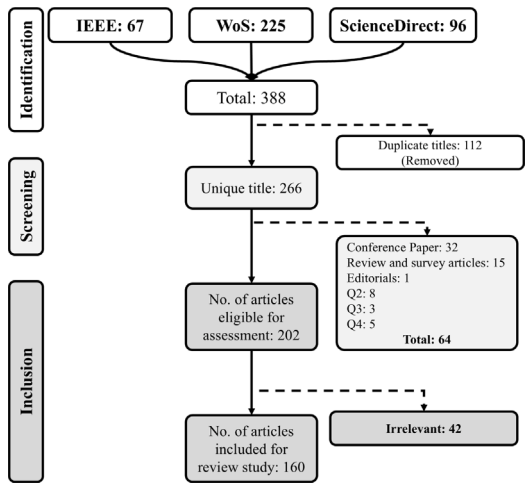

Fig. 2. Schematic illustrating the research-paper-filtering process.

- WoS: (AB=("Electric Vehicle" OR "EV") AND AB=("Battery")) AND ((AB="Deep Learning" OR AB="Machine Learning" OR AB="Artificial Intelligence" OR AB="Neural Network") AND (AB="State of Health" OR AB="Remaining Useful Life" OR AB="SOH" OR AB="RUL"))
- ScienceDirect: (("Electric Vehicle" OR "EV") AND ("Battery")) AND (("DeepLearning" OR "Machine Learning" OR "Artificial Intelligence" OR "Neural Network") AND ("State of Health" OR "Remaining Useful Life"))

After searching using those keywords total of **388** articles are found. Using *PRISMA* guideline, the found article was filtered, and the steps are shown in Fig. 2 and described as:

- The articles must be fully written in English and Q1 journal.
- The articles had to be focused on the battery SoH or RuL estimation using AI models.
- The articles applied AI-based battery SOH and RuL with novel conclusive ideas, not just a model comparison-based approach.

On the other hand, the following criteria were set to exclude any article from the final review:

- Articles that are not written in English.
- Articles published in conferences or journals that are not classified as Q1.
- Articles that do not include AI or machine learning-based approaches.
- Articles that do not include EV batteries.

3. Battery SOH and RUL

Understanding battery degradation is critical to ensuring the safe and reliable operation of LIBs. The aging or degradation process of these batteries is difficult to analyze due to complex internal electrochemical dynamics, variations in internal resistance, and temperature effects. For these reasons, statistical measures such as SOH and RUL are commonly used to assess battery aging. SOH is typically defined as the ratio of the current battery capacity to its initial nominal capacity. This is reflected in Eq. (1), where C_{actual} and $C_{initial}$ represent the actual and nominal capacities, respectively. In some studies, SOH is alternatively defined by changes in internal resistance, which indicate an increase over time due to factors such as the loss of active material [27]. This can be expressed by Eq. (2), where R_{eol} represents the internal resistance at the end of life (EOL), R is the current internal resistance, and $R_{initial}$ denotes the initial resistance of the battery. Due to the nonlinear degradation characteristics of batteries driven by different aging mechanisms and stages, accurately predicting RUL is crucial. RUL reflects the remaining time before a battery reaches its EOL. It can be expressed by Eq. (3), where CC_α denotes the present cycle count and CC_{eol} is the cycle count at EOL. By predicting the EOL cycle number, the battery's RUL at cycle α can be determined, which helps improve battery management.

$$SOH = \frac{C_{actual}}{C_{initial}} \tag{1}$$

$$SOH = \frac{R_{eol} - R}{R_{eol} - R_{initial}} = \frac{R}{R_{initial}} \tag{2}$$

$$RUL_\alpha = CC_{eol} - CC_\alpha \tag{3}$$

Based on the definitions of SOH and RUL, a strong connection exists between these two parameters, as aging factors influence both and can often be derived using similar methods. Typically, SOH is evaluated first by an estimation model, and the resulting SOH value is then used as a characterization parameter to estimate RUL [28,29]. In recent studies, simultaneous evaluation of SOH and RUL through direct capacity prediction was shown to be promising [30–32]. This approach improves estimation accuracy by utilizing the interdependence between the two parameters. These studies demonstrate that SOH and RUL are closely correlated, with their joint estimation improving the model's prediction capabilities significantly.

4. Datasets, data preprocessing, and model optimization

Training an AI model for accurate SOH and RUL estimation in real-life systems demands high-quality datasets and effective data preprocessing. Data preprocessing prepares raw data for model training by addressing missing values, performing feature selection and engineering, and applying data normalization. This approach ensures that the model can capture both long- and short-term relationships within the data, which improves estimation accuracy. In addition, model parameter optimization is crucial because fine-tuning the model's parameters ensures it is trained under optimal conditions, which improves its performance. This section reviews publicly available datasets and highlights their key features and limitations., It also examines essential feature-selection techniques and parameter-optimization strategies to enhance AI model accuracy and efficiency.

4.1. Dataset

Battery cycling test databases are becoming increasingly important as the demand for high-performance, safe, and durable energy storage systems continues to rise. These datasets provide high-precision charging and discharging data from LIBs, simulating real-life usage scenarios using advanced measurement equipment. Recently, several institutions and research laboratories have made their battery-cycling datasets publicly available, which facilitates the development and validation of more robust SOH and RUL estimation models. In addition, these datasets contribute to the standardization of battery testing and reporting practices.

Available online data sets are given in Table 2. The PCoE battery dataset provides high-frequency data from Li-ion 18650 batteries that were subjected to three distinct operational profiles: charging, discharging, and electrochemical impedance spectroscopy, all conducted at varying temperatures. The experiment continued until the batteries experienced a 30% reduction in their rated capacity [33]. Similarly, the randomized dataset also utilizes 18650 LIBs for testing but differs in its approach by employing randomized charging and discharging conditions. In this dataset, HIs vary unpredictably to better simulate real-life scenarios. The testing process incorporates three different reference profiles: a low-current discharge at 0.04 A, pulse current charging

Table 2
List of different publicly available battery-aging datasets.

References	Name of dataset	Institutions	Date	Data format	Balanced dataset	Cell chemistry	Data volume	Data information
Yitia Chen . [33]	PCoE Battery Dataset	NASA Ames	Last update 28 April 2024	.csv	✗	Li-ion	586MB	Provide high-frequency data from Li-ion 18650 batteries experiencing different operational profiles in order to research battery deterioration
Birkl et al. [35]	Oxford Battery Degradation Dataset	Oxford University	Published 2017	.mat	✗	Li-ion	253MB	Offers comprehensive data on LIB degradation over extensive cycles, focusing on understanding degradation mechanisms under Urban Artemis Drive cycle.
Bole et al. [34]	Randomized Battery Usage Dataset	NASA Ames	Last update 21 oct 2022	.zip	✓	LCO	–	Explore the impact of randomized usage patterns on LIB life and performance, providing value-able insights for optimizing battery usage strategies
Kollmeyer et al. [36]	Panasonic 18650PF Li-ion Battery Dataset	University of Wisconsin-Madison, McMaster University	Published 2018	.zip	✓	NCA	182MB	Provide battery degradation data for different temperature condition varying from −20°C to 25°C with five pulse HPPC test.
Saxena et al. [37]	CALCE Battery Research Group	University of Maryland	Published 2010–2013	–	✗	LCO, LFP, and NMC	– –	Consist of battery data for reliability analysis, accelerated battery deterioration modeling, battery state estimation, and remaining usable life prediction
Pozzato et al. [38]	Stanford Battery aging Datasets	Stanford University	Last update 02 March 2023	.xlxs, .mat	✗	NMC	–	Provide EV real-driving aging cycle data that is used to construct and improve battery aging models for model-based diagnosis techniques and health estimate strategy creation
Luh et al. [39]	KIT Battery Aging Dataset	Karlsruhe Institute of Technology	Published 2024	.tar	✓	NMC/C+SiO Li-ion cells	69.4GB	Utilize for testing battery impedance or state estima-tion methods modeling battery degeneration, learning about lithium plating, and optimizing operating tactics

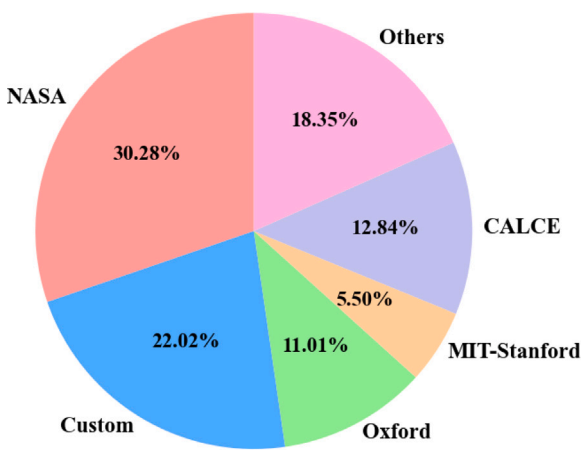

Fig. 3. Analysis of the dataset frequency distribution.

and discharging of a fully charged battery with a 1 A load, and a 20 min no-load period following every 3000 random-walk cycles [34]. Both datasets are from NASA and are the most commonly used datasets to test AI-based SOH and RUL estimation models. The analysis of dataset usage is shown in Fig. 3. The NASA dataset is most frequently used (30.28%), followed by Custom datasets (22.02%) and Others (18.35%). CALCE (12.84%), Oxford (11.01%), and MIT-Stanford (5.50%) are used less frequently, reflecting a mix of standard and diverse data sources in current research.

The second most widely used dataset is the CALCE dataset, provided by the University of Maryland's Battery Research Group [37]. This dataset includes two separate subsets for two different battery types: the CS2 cell, with a capacity of 1100 mAh, and the CX2 cell, with a capacity of 1350 mAh. Both battery types underwent a constant current/constant voltage (CC-CV) charging protocol, where a constant current was applied until the battery voltage reached 4.2 V. During discharge, the cutoff voltage was set to 2.7 V for both battery types. Following the CALCE dataset, the Oxford Battery Degradation dataset is among the most widely used datasets. It features data from tests conducted on eight small Li-ion pouch cell batteries in a thermal chamber at 40°C. The batteries were charged using a CC-CV protocol and discharged following the Urban Artemis Drive Cycle profile. HIs (HI) were recorded every 100 cycles until the batteries reached their end of life. For fast-charging batteries, datasets from MIT and Stanford University were used. These datasets involve lithium iron phosphate (LFP)/graphite cells that were tested under controlled conditions at 30°C.

Imbalanced failure distributions occur across many publicly available battery-aging datasets, such as CALCE, NASA (PCoE), Oxford, and Stanford, primarily due to variability in testing protocols, inconsistent failure thresholds, and practical constraints like limited testing duration or early termination of experiments. In many cases, not all cells are cycled to complete failure; some degrade slowly or are halted prematurely, leading to an overrepresentation of healthy or mid-life data and a scarcity of end-of-life samples. This imbalance can significantly affect the performance of predictive models, especially for tasks like SOH estimation and RUL prediction, where learning from degradation patterns is critical. To address this, techniques such as data augmentation (e.g., perturbing or interpolating battery features), synthetic data generation (using methods like SMOTE or GANs to create realistic failure data), and cost-sensitive learning (assigning higher penalties to misclassifying rare failure instances) can be employed [40,41]. These approaches help improve model robustness and ensure that rare but crucial failure scenarios are effectively captured during training.

4.2. Feature selection strategies

AI-based feature selection methods, such as filter-based Pearson correlation coefficient (PCC), wrapper-based Recursive Feature Elimination, and fusion-based Least Absolute Shrinkage and Selection Operator (LASSO), are widely used to identify and retain only the most relevant features while removing redundant or irrelevant ones to improve the accuracy of the estimation models. By reducing data dimensionality, these methods minimize computational costs and speed up both model training and inference. AI-based techniques (e.g., neural networks, deep learning) overcome the limitations of conventional methods by capturing complex relationships within the data. Moreover, these approaches help develop models that generalize effectively across varying conditions.

4.2.1. Pearson correlation coefficient (PCC)

A simple correlation matrix is first created to eliminate unnecessary information and select the key features. However, the PCC quantifies the linear relationship between two variables by comparing their covariance to the product of their standard deviations. The equation for calculating PCC is

$$r_{xy} = \frac{\sum(x_i - \overline{x})(y_i - \overline{y})}{\sqrt{\sum(x_i - \overline{x})^2 \sum(y_i - \overline{y})^2}} \tag{4}$$

In this equation, x_i represents the individual values of the x variable, $\overline{x}$ is the mean of these x values, y_i denotes the y variable, and $\overline{y}$ is the

mean of the y values [42]. The strength of the linear incorporation between two profiles is quantified by using the Pearson correlation coefficient, which measures specifically how comparable their changes in expression levels are [1]. With the help of the PCC, the model is optimized by selecting the most relevant features for feature selection, ranking, and dimension reduction. In this way, it improves efficiency and reduces computational complexity [43]. Moreover, PCC analysis is used to choose features for the SOH model, with an emphasis on five essential characteristics obtained from every discharging cycle: terminal voltage (V), capacity (Ah), current (A), time (s), and temperature (°C).

4.2.2. Principal Component Analysis (PCA)

Principal Component Analysis (PCA) is used to manage multiple degradation features in battery packs containing series and parallel cells. By reducing dimensionality, PCA extracts independent features that preserve the most significant information while identifying the most relevant input variables [44]. The process begins with feature normalization to eliminate unit-based effects, followed by projection onto unit vectors to compute the covariance matrix. Principal components are selected based on eigenvectors (corresponding to the largest eigenvalues) to ensure maximum variance retention. This reduction enhances computational efficiency while preserving critical degradation information. In battery energy storage systems, PCA is used for diagnosing, identifying, and extracting internal parameters [45]. It also improves input data interpretation, which minimizes loss in SVMs [46]. In addition, PCA enhances the accuracy and scalability of SOC estimation in ANN models by identifying the most informative battery performance parameters [47]. For SOH estimation, the cumulative contribution rate is typically set between 70% and 90% [48].

4.2.3. Least absolute shrinkage and selection operator (LASSO)

LASSO is a method for regularization and feature selection. It penalizes model parameters and preserves non-zero coefficients while eliminating irrelevant ones. A tuning parameter called the penalization parameter regulates the penalty's strength, which reduces dimensionality and simplifies to Ordinary Least Squares (OLS) regression [49]. LASSO improves prediction accuracy by reducing variance with minimal bias increase and enhances interpretability by removing irrelevant variables, which reduces overfitting in simplified models [50]. LASSO shrinks less important feature coefficients to zero, which enables the identification of the most relevant features while reducing overfitting [51].

4.3. Parameter optimization strategies

To analyze, categorize, or enhance current systems or data, an optimization algorithm is a crucial tool for choosing the best option from a range of potential solutions. Accurate estimation of the SOH and SOC of batteries, improvement of model adaptability, and generalization performance are achieved using parameter optimization methods. Fig. 4 illustrates the basic step-by-step process of model parameter optimization techniques. Various methods, including Particle Swarm Optimization (PSO), Genetic Algorithm (GA), Levenberg–Marquardt (LM), and Bayesian Optimization (BO), have been used to enhance estimation accuracy and efficiency.

4.3.1. Particle Swarm Optimization (PSO)

PSO is a bio-inspired algorithm designed for continuous optimization problems, which mimics swarm behavior. It initializes a group of randomly positioned solutions (particles) that navigate a multidimensional search space. Each particle updates its position based on its best-found solution and the best global solution of the swarm. This iterative process continues until convergence occurs or a stopping criterion is met. PSO is widely recognized for its efficient global search, fast convergence, and applications in optimization control, image processing,

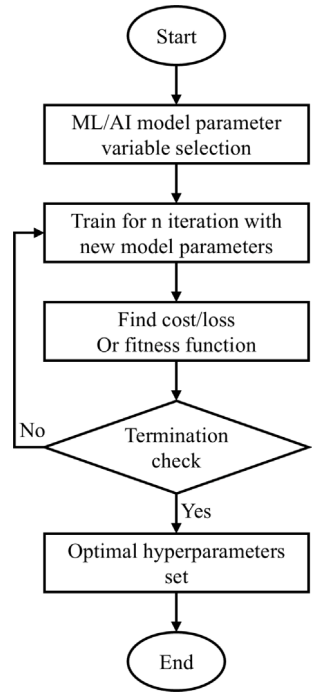

Fig. 4. Flow chart illustrating model parameter optimization.

and neural network training. Ma et al. [52] utilized PSO to optimize the weights and thresholds of a back-propagation neural Network (BPNN), which demonstrated improved stability, learning efficiency, and accuracy in SOH and RUL predictions. Consequently, PSO enhances neural network performance for battery SOC, SOH, and RUL estimation [53]. In addition, it aids in hyperparameter selection for RNNs in LIB RUL prediction.

4.3.2. Genetic Algorithm (GA)

GA optimizes ANN parameters by mimicking natural evolution. It begins with a randomly generated population (chromosomes), which introduces variability through a Gaussian distribution. Next, selection methods like the Roulette Wheel, Tournament, and Boltzmann identify the fittest chromosomes based on a fitness function. Crossover operators (single or multi-point) then generate new offspring, while mutation operators (uniform or Gaussian) introduce randomness to maintain diversity and avoid local extremes. This iterative process continues until a stopping criterion is met to ensure optimal parameter tuning [54]. The GA-PSO hybrid algorithm enhances SVR parameter optimization, which improves SOH estimation accuracy and convergence speed. GA refines neural network weights and thresholds to address parameter calibration challenges [55]. It also reduces training time and optimizes backpropagation neural networks for precise LIB SOH estimation.

4.3.3. Levenberg–Marquardt (LM)

The LM algorithm optimizes nonlinear least squares problems and is widely applied in regression and curve-fitting tasks. It iteratively adjusts model parameters (e.g., weights and biases) to minimize the error between expected and observed data [56]. LM combines the stability of the Gradient Descent Method with the fast convergence of the Gauss–Newton Algorithm (GNA) and dynamically adjusts the damping factor to balance both approaches. It refines parameters through a split training set and stops early if performance stagnates [57]. The LM algorithm is also used for parameter discrimination in impedance spectra, accurately identifying relationships between SOC, SOH, and charge transfer resistance in lithium iron phosphate batteries.

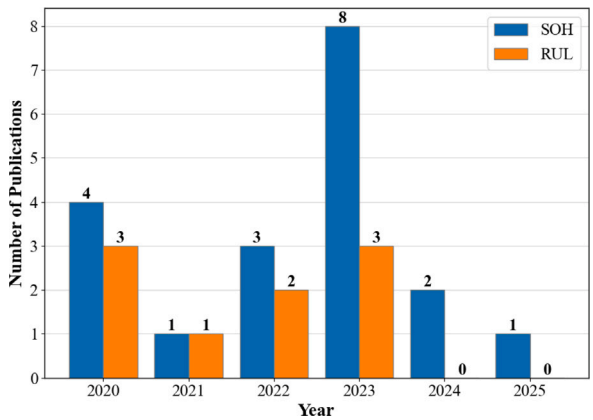

Fig. 5. Annual distribution of publications on machine learning models.

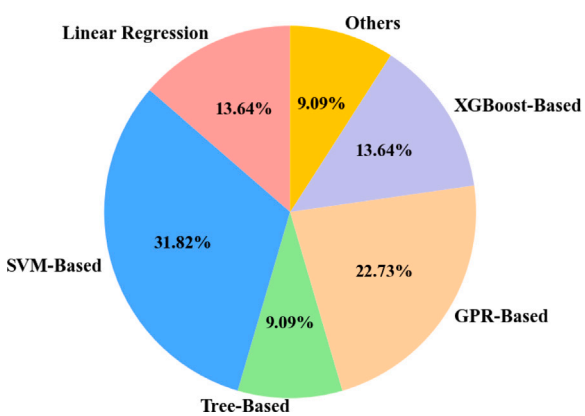

Fig. 6. Distribution of different machine learning models.

4.3.4. Bayesian optimization (BO)

The BO algorithm, also known as BR, enhances neural network training by improving estimation accuracy through regularization. It balances data fitting and model assumptions to ensure optimal convergence by randomly selecting regularization coefficients. BO optimizes weight configurations, prevents overfitting, and maintains an effective trade-off between model complexity and performance by establishing prior distributions over parameters and updating them based on observed data [56]. It effectively handles small sample sizes and prevents overfitting by incorporating a regularization term in the objective function. Akpinar et al. [58] used BR to accurately predict the battery surface temperature in EV applications.

5. Machine learning models

ML techniques have gained popularity due to their high accuracy and low computational cost. Recent advances in data-driven models enable accurate SOH and RUL predictions without the need for physical modeling. These benefits drive researchers to develop various ML-based approaches for battery health estimation. A summary of Publications Classified by Machine Learning Models can be found in Table 3. Fig. 5 shows a bar chart that illustrates the publication trends for SOH and RUL estimation using ML models from 2020 to 2024. Fig. 6 shows a pie chart with the distribution of ML approaches. SVM-based models are leading (31.82%), followed by GPR-based models (22.73%), linear regression and XGBoost-based models (13.64% each), and tree-based and other methods (9.09% each).

5.1. Regression models

Regression models play a critical role in both statistical analysis and machine learning as they model the relationship between dependent and independent variables. The goal is to predict the dependent variable based on given independent variables. Common models include linear, polynomial, and ridge regression. These are defined by Eqs. (5), (6), and (7), where β_0 denotes the intercept, while $\beta_1, \beta_2, \ldots, \beta_n$ are the coefficients, ϵ represent the error term, and λ is the regularization parameter. Maleki et al. [61] used linear and ridge regression for battery SOH estimation under noisy conditions by combining it with a Savitzky–Golay (S–G) filter to improve accuracy. Their results show that ridge regression enhances robustness while linear regression is computationally efficient for fluctuating data. GPR is a non-parametric model that uses a Bayesian framework to define a probability distribution over possible functions. Zhang et al. [60] applied GPR with 20,000 EIS spectra from commercial LIBs for SOH and RUL estimation, which highlights its effectiveness under varying temperature conditions. Wang et al. [70] also used GPR with EIS data for SOH estimation and confirmed its capability to capture the kinetic and dynamic characteristics of LIBs. These studies underscore GPR's strong performance in SOH estimation using EIS data.

$$y = \beta_0 + \beta_1 x_1 + \beta_2 x_2 + \cdots + \beta_n x_n + \epsilon \tag{5}$$

$$y = \beta_0 + \beta_1 x + \beta_2 x^2 + \cdots + \beta_n x^n + \epsilon \tag{6}$$

$$\text{minimize}\left(\sum_{i=1}^{n}(y_i - \hat{y}_i)^2 + \lambda \sum_{j=1}^{p} \beta_j^2\right) \tag{7}$$

$$y_i = f(x_i + \epsilon_b) \tag{8}$$

5.2. Gradient boosting frameworks

Gradient boosting is a powerful machine-learning technique that can help create accurate predictive models by sequentially combining weak learners, typically decision trees [64]. Each iteration adds a new model to correct errors from previous ones, which improves accuracy and captures complex data patterns. Several advanced gradient-boosting algorithms are commonly used: Gradient-Boosted Decision Trees, eXtreme Gradient Boosting (XGBoost), Light Gradient Boosting Machine (LightGBM), and Categorical Boosting (CatBoost). Each offers unique benefits. LightGBM enhances computational efficiency and scalability by using gradient-based one-sided sampling. It reduces data usage per iteration while maintaining predictive accuracy [67]. CatBoost efficiently handles categorical data through binary decision trees and uses Target Statistics to estimate category-based outputs during training [74]. Li et al. [62] applied CatBoost for battery SOH estimation in EVs, using PCA to identify key HIs. It reached an RMSE of 1.12%. Wen et al. [72] introduced N-CatBoost, which decreased RMSE to 0.817%. XGBoost improves gradient boosting efficiency and scalability while refining predictions and reducing bias and variance by using built-in handling of missing data [75]. Jaari et al. [63] integrated XGBoost with an Extended Kalman Filter (EKF) for feature selection in a digital twin-based SOH estimation framework.

$$obj(\theta) = \sum_{i=1}^{m} l(y_i, \hat{y}_i) + \sum k \tag{9}$$

5.3. Support vector machines (SVMs)

SVMs are powerful supervised learning models that are commonly used for classification and regression [66]. They identify the optimal hyperplane that maximizes the margin between classes in high-dimensional spaces, which makes them effective for complex, non-linear problems [19]. SVMs use support vectors to define the hyperplane's position, and the regularization parameter C balances margin

Table 3
Summary of Publications Classified by Machine Learning Models.

Publications	Models	Year	Estimation	Operation	Dataset	Performance Metrics	Complexity
Shu et al. [59]	LS-SVM	2020	SOH	online	–	MAE: 1%	Moderate
Zhang et al. [60]	SVR	2022	RUL	online	NASA, Stanford	MAPE: 0.93%	Moderate
Maleki et al. [61]	Hybrid RR	2022	SOH	–	NASA	RMSE: 15.38×10^{-3}	Least
Li et al. [62]	CatBoost	2022	SOH	offline	Custom	RMSE: 1.12%	High
Jaari et al. [63]	EKF-XGBoost	2022	SOH	online	NASA	RMSE: 0.009%	High
Khawaja et al. [64]	RF	2023	SOH	offline	Github	RMSE: 0.0097	High
Lelli et al. [65]	RF	2023	SOH	offline	Hyundai Motor	MAE: 0.02%	High
Luo et al. [66]	SVM	2023	SOH	offline	Custom	–	Moderate
Jafari et al. [67]	LightGBM	2023	RUL	–	Custom	R^2: 0.97	High
Khawaja et al. [64]	RF	2023	SOH	offline	Github	R^2: 0.999	Moderate
Zhao et al. [68]	XGBoost with MLR	2023	Degradation Rate	online	Custom	R^2: 0.97%	High
Ran et al. [69]	GPR	2023	SOH	–	Custom	Accuracy: 95%	High
Wang et al. [70]	ARD-GPR	2023	SOH	–	Custom	RMSE: 0.0074	High
Wang et al. [71]	GPR	2024	SOH	online	–	RMSE: 0.85%	High
Wen et al. [72]	N-CatBoost	2024	SOH	–	NDANEV	RMSE < 1.1559%	High
Xia et al. [73]	SVM	2025	SOH	–	Custom	RMSE = 1.04%	Moderate

maximization by using a classification error. The hyperplane equation is given by Eq. (10), and the objective function by Eq. (11). SVMs are robust against overfitting, particularly in high-dimensional data, but can be computationally expensive and require careful hyperparameter tuning [76]. SVMs have proven effective in battery SOH and RUL estimation. Luo et al. [66] applied SVM for SOH estimation, while Zhang et al. [60] used Support Vector Regression (SVR) for RUL prediction, achieving an MAPE of 0.93%. Patil et al. [19] reported an RMSE below 0.86%, and Li et al. [77] achieved an MSE of 765.13 and an R^2 of 0.9959. More recent studies, such as Beltran et al. [78], have reported strong SOH prediction results. However, despite their effectiveness, SVMs require careful hyperparameter tuning to prevent overfitting.

$$y = f(x, w) = \sum_{i=1}^{m} w_i \cdot x_i + b \tag{10}$$

$$\min_{\mathbf{w},b,\xi} \frac{1}{2}\|\mathbf{w}\|^2 + C\sum_{i=1}^{n} \xi_i \tag{11}$$

Subject to:

$$y_i(\mathbf{w} \cdot \mathbf{x}_i + b) \geq 1 - \xi_i, \quad \xi_i \geq 0, \quad i = 1, \ldots, n \tag{12}$$

6. Deep learning models

In Fig. 7, the bar chart highlights the trends in research publications from 2020 to 2024, focusing on SOH and RUL estimations for batteries via deep-learning models. It provides insights into the increasing application of deep-learning techniques for battery management over this period. A summary of Publications Classified by deep Learning Models can be found in Table 4. Fig. 8 shows a pie chart illustrating the prevalence of various deep-learning models for estimating battery SOH and RUL. Long Short-Term Memory (LSTM) networks dominate, with 28.57%, reflecting their ability to capture temporal dependencies in sequential data. They are best for battery health monitoring. Gated Recurrent Units (GRUs) follow at 21.43%. They offer a simpler alternative to LSTMs with similar performance. CNNs account for 14.29% of the total and are effective for feature extraction from complex data. Additionally, the "Others" category, accounting for 21.43%, highlights the emergence of new techniques in the field. Both RNNs and Transformers each contribute 7.14%, reflecting their presence and relevance in the current landscape. This distribution underscores the growing reliance on deep-learning architectures to improve the accuracy and reliability of battery health predictions.

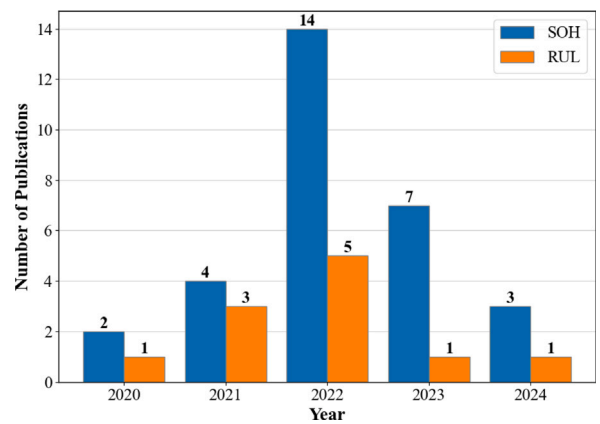

Fig. 7. Annual distribution of publications on Deep Learning Models.

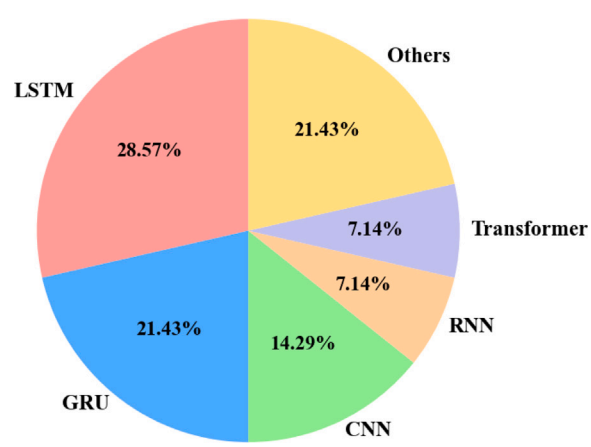

Fig. 8. Distribution of different deep learning models.

6.1. Recurrent neural networks (RNNs)

RNNs are designed to process sequential data, and they differ from conventional FFNNs by incorporating directed cycles that enable the network to maintain a memory of previous inputs through the network's internal state [102]. This architecture makes RNNs suitable for tasks like time series analysis and natural language processing. At each time step, the RNN updates its hidden state based on the

Table 4
Summary of Publications Classified by Deep Learning Models.

Publications	Models	Year	Estimation	Operation	Dataset	Performance Metrics	Complexity
Crocioni et al. [79]	CNN-RNN	2020	SOH	offline	NASA	RMSE: 0.0488	High
Rastegarpanah et al. [80]	CNN	2021	SOH	offline	–	RMSE: 1.974%	Least
Lee et al. [81]	MNN	2021	SOH	offline	–	Avg. error < 0.973%	–
Yao et al. [82]	LSTM	2022	SOH	–	NASA	RMSE: 1.62%	Moderate
Lee et al. [83]	LSTM	2022	SOH	online	NASA, Oxford	Est. error: 0.734	Moderate
Shi et al. [84]	PI-LSTM	2022	RUL	online	NASA	MAPE: 55.56%	Moderate
F. Heinrich et al. [85]	LSTM	2022	SOH	online	Custom	MAE: 1.77%	Moderate
Deng et al. [1]	LSTM	2022	SOH	offline	MIT-Stanford	RMSE: 1.13%	Moderate
Chen et al. [86]	ResNet	2022	SOH	offline	NASA	RMSE: <2.42	High
Li et al. [87]	PIAM	2022	SOH	online	–	MAE: 0.0065	–
Ren et al. [88]	LSTM	2022	SOH	online	NASA	RMSE: 0.45%	Moderate
Sheng et al. [89]	LSTM	2022	SOH	offline	NASA, CALCE	RMSE: 0.860	Moderate
Zhang et al. [90]	GRU-RNN	2022	RUL	online	NASA, CALCE	MAE: 0.00217	High
Zhao et al. [91]	GRU	2022	SOH	–	Oxford	RMSE: 0.648%	Moderate
Bao et al. [92]	CNN-BiGRU	2022	SOH	offline	NASA, Oxford	RMSE: < 3.21%	High
Mei et al. [93]	Bayes BiLSTM	2022	SOH	online	NASA	RMSE: 0.01338	Moderate
Chen et al. [27]	Vision Transformer	2022	RUL	online	NASA, CALCE	MAE: 0.0713	High
Bai et al. [94]	Transformer	2023	SOH	online	NASA, Oxford	RMSE: 0.003%	High
Lin et al. [95]	CNN	2023	SOH	–	Custom, Oxford	RMSE: 0.6%	Least
L. Zhou et al. [96]	RNN	2023	SOH	offline	CALCE	MAPE: 0.2869%	Least
Jorge et al. [97]	LSTM	2023	SOH	offline	MIT, NASA	RMSE: 1.04×10^{-2}	Moderate
J. Schmitt et al. [98]	GRU	2023	SOH	–	Custom	R^2: 99.4%	Moderate
J. Schmitt et al. [6]	AE	2023	SOH	–	Oxford, NASA	Avg. deviation 0.36%	Moderate
Rao et al. [99]	GRU	2024	SOH	–	NASA	RMSE: 0.003	Moderate
Liu et al. [100]	GRU	2024	SOH	–	Custom	RMSE: 0.094%	Moderate
Ma et al. [101]	Transformer	2024	RUL	–	CALCE	RMSE: 0.0699	High

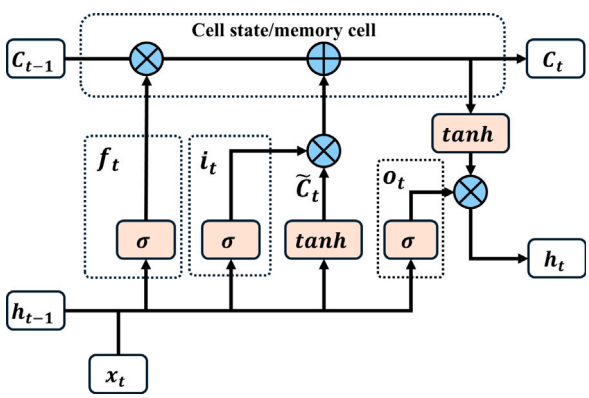

Fig. 9. Schematic illustration of an LSTM unit.

current input and the previous hidden state, which allows it to retain information from earlier sequence elements [79]. This process is governed by Eqs. (13) and (14), where h_t represents the hidden state, x_t denotes the input, y_t the output, and W_h, U_h, b_h, and b_y are parameters like weights and biases, with σ denoting an activation function (e.g., tanh or ReLU). Training RNNs involves backpropagation through time, which computes gradients for each time step, enabling the network to learn temporal dependencies. However, RNNs suffer from problems like vanishing and exploding gradients, especially in long sequences [32]. To mitigate these problems, variants such as LSTM networks [32,88], GRUs [103], and GRUs have been developed that utilize gating mechanisms to better regulate information flow and update the hidden state. RNNs are critical in applications such as language modeling, speech recognition, and time series forecasting.

$$h_t = \sigma(W_h x_t + U_h h_{t-1} + b_h) \tag{13}$$

$$y_t = \sigma(W_y h_t + b_y) \tag{14}$$

6.2. Long short-term memory (LSTM)

LSTM is an advanced RNN model designed to tackle the vanishing or exploding gradient problem by incorporating memory cells and control gates, which allow it to model long-term sequences more effectively [104]. An LSTM unit consists of four components: the input gate (i_t), forget gate (f_t), output gate (o_t), and cell state (c_t) as shown in Fig. 9. The cell state is crucial as it stores long-term sequence information, decides what to forget, and incorporates new data from the current input [81]. The forget gate determines what information should be discarded, modeled by Eq. (15), where w_f, h_{t-1}, x_t, and b_t represent the forget gate's weight, previous hidden state, current input, and bias, respectively. The input gate introduces new information to the LSTM, as expressed in Eq. (16), while also generating a candidate cell state as described by Eq. (17), with $\tilde{C}_t$ representing this candidate state. The final cell state C_t is computed by combining the outputs from the forget and input gates through piecewise multiplication, as shown in Eq. (18). The output gate generates the new hidden state, detailed in Eqs. (19) and (20).

$$f_t = \sigma(W_f \cdot [h_{t-1}, x_t] + b_f) \tag{15}$$

$$i_t = \sigma(W_i \cdot [h_{t-1}, x_t] + b_i) \tag{16}$$

$$\tilde{C}_t = tanh(W_c \cdot [h_{t-1}, x_t] + b_c) \tag{17}$$

$$C_t = f_t * C_{t-1} + i_t * \tilde{C}_t \tag{18}$$

$$o_t = \sigma(W_o \cdot [h_{t-1}, x_t] + b_o) \tag{19}$$

$$h_t = o_t * tanh(C_t) \tag{20}$$

Yao et al. [82] proposed an LSTM-based SOH estimation model that incorporates internal capacity analysis and discrete wavelet transform, achieving an MAE of 1.24% and an RMSE of 1.62% on the NASA dataset. Lee et al. [83] enhanced SOH estimation by integrating SOC into the LSTM framework, reporting a reduced error of 0.734 on

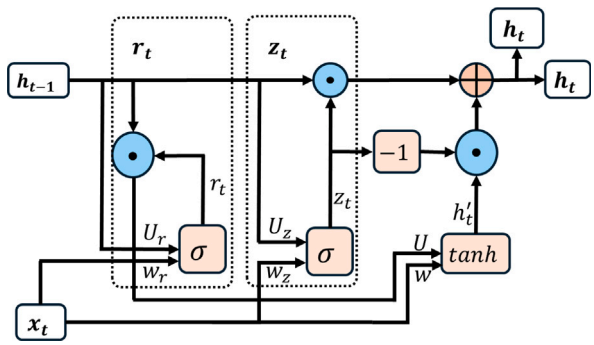

Fig. 10. Schematic illustration of a GRU unit.

datasets from NASA and Oxford. Deng et al. [1] combined TF with LSTM and attained an MAE of 0.94% and RMSE of 1.13% using the MIT-Stanford dataset. Ren et al. [88] further optimized LSTM using cuckoo search and achieved an MAE of 0.82%. Other notable studies, including Jorge et al. [97], Hu et al. [105], and Shi et al. [84], reinforce LSTM's effectiveness for battery health estimation, demonstrating competitive performance across metrics such as RMSE and MAPE, and confirming its wide applicability.

6.3. Gated recurrent unit (GRU)

To accelerate LSTM training and improve gradient descent, Cho et al. [106] introduced the GRU, which simplifies the architecture by replacing the input and forget gates with an update gate (z_t). GRU also includes a reset gate (r_t) to control how much past information should be discarded [107]. The complete architecture is shown in Fig. 10. The reset and update gates function similarly to the LSTM gates and are represented by Eqs. (21) and (22), where w and b denote the weights and biases of each gate, respectively. The new candidate hidden state is computed using Eq. (20), while the final hidden state is generated using Eq. (24).

$$r_t = \sigma(W_r \cdot [h_{t-1}, x_t] + b_r) \tag{21}$$

$$z_t = \sigma(W_z \cdot [h_{t-1}, x_t] + b_z) \tag{22}$$

$$\tilde{h}_t = tanh(W_h \cdot [r_t \odot h_{t-1}, x_t] + b_h) \tag{23}$$

$$h_t = (1 - z_t) \cdot h_{t-1} + z_t \odot \tilde{h}_t \tag{24}$$

By using fewer gates and operations, GRUs can reduce model complexity and significantly improve the training process. GRUs are a simplified version of LSTMs that typically result in faster training times while maintaining high performance, especially in data-limited scenarios. L. Schmitt et al. [98] estimated SOH without relying on predefined aging information, such as error-prone SOC or charge throughput. They integrated ICA data into a GRU-based AI model, achieving an R^2 of 99.4% on a custom dataset. Rao et al. [99] compared LSTM, DNN, and GRU architectures for SOH estimation and found GRU to perform best, reporting an RMSE of 0.003 and an MAE of 0.003 on the NASA dataset. Liu et al. [100] proposed a model combining a conditional GAN with an improved GRU architecture, optimized using the sparrow search algorithm. Their model effectively handles data loss scenarios in SOH estimation, achieving an MAE of 0.088% and RMSE of 0.094% on a custom dataset, demonstrating strong performance and robustness.

6.4. Convolutional neural networks (CNNs)

CNNs are deep learning models designed for grid-like data such as images, introduced by Yann LeCun in the late 1980s [108]. CNNs have transformed computer vision and excel in tasks like image classification, object detection, and segmentation. They are inspired by receptive fields and use shared convolving filters to extract both local and global features, reducing dimensionality and improving processing speed [109]. The basic CNN structure for SOH and RUL estimation is shown in Fig. 11.

CNNs consist of convolutional layers that apply learnable filters to input data and create feature maps by performing element-wise multiplication and summation to detect patterns such as edges and textures [110]. Moreover, pooling layers reduce spatial dimensions through methods such as "max pooling", which selects the maximum value within a window, while fully connected layers integrate the learned features for the final classification or regression task. CNNs are trained using gradient-based optimization methods like SGD or Adam, minimizing loss functions such as MSE and using backpropagation to update the network's parameters. Bao et al. [92] proposed a CNN-BiGRU hybrid architecture that utilizes CNN for feature extraction and BiGRU for sequence modeling, achieving an MAE of less than 1.83%. Zhao et al. [91] enhanced CNN performance by incorporating a parallel hybrid attention mechanism, resulting in an RMSE of 0.648%. Lin et al. [95] employed CNN layers for latent feature extraction followed by a dense layer, which improved accuracy and reduced RMSE, achieving an MAE of 0.41% on custom and Oxford datasets. Rastegarpanah et al. [80] combined CNN with EIS data to enhance SOH estimation, reporting an MAE of approximately 1.512%.

$$y(t) = (f \times x)(t) = \sum_{s=-\infty}^{\infty} x(s) \cdot f(t - s) \tag{25}$$

$$m(t) = max_{s=t}^{t+p-1} h(s) \tag{26}$$

6.5. Transformer based models

Transformer models are used in battery SOH and RUL estimation to capture long-range dependencies and complex patterns in time-series data. Its attention mechanisms enable accurate prediction by focusing on critical features across different time steps. In a research paper, Bai et al. [94] proposed a transformer-based model that effectively captures global dependencies for accurate battery SOH estimation, achieving an RMSE of 0.003%. Chen et al. [27], who integrated Denoising Auto-Encoders with transformers, achieved a relative error of 0.2252. In another research paper, Ma et al. [101] proposed a Transformer model with an improved self-attention mechanism for RUL prediction using key interval aging data, achieving an RMSE of 0.0699.

7. Advanced data-driven models

7.1. Hybrid models

In traditional SOH and RUL estimation frameworks, a single data-driven model is typically used; however, this approach faces inherent limitations. To address these, hybrid data-driven models have been proposed, where multiple models work in parallel or series to estimate the SOH and RUL. The key benefit of these hybrid models is that they combine the strengths of each model to compensate for their specific weaknesses. Fig. 12 shows the increasing number of research publications on SOH and RUL estimation using hybrid models from 2020 to 2024. It shows a growing trend for combining various methodologies to improve battery management predictions. These hybrid approaches often combine machine-learning models, deep-learning techniques, filter-based approaches, and AI/ML with various optimization methods.

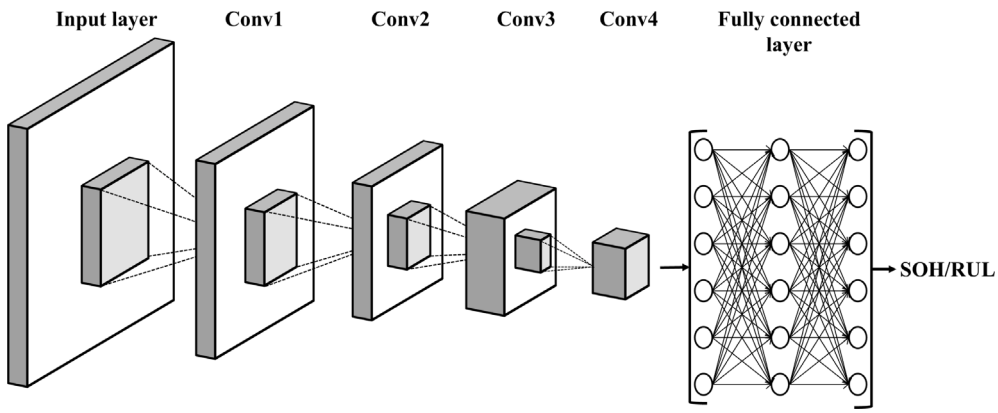

Fig. 11. Schematic illustration of a CNN-based SOH and RUL estimation.

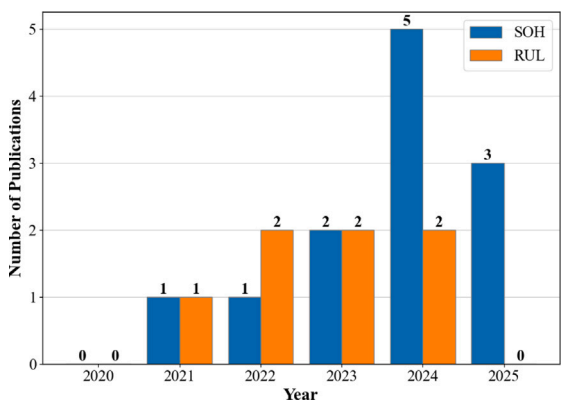

Fig. 12. Annual distribution of publications on Hybrid Models.

In 2024, Ma et al. [3] introduced the ECSSA-KDCN model for RUL estimation of solid-state LIBs, where HIs were extracted using "No Free Lunch" methods. The model was optimized using the energy circle sparrow search algorithm, achieving an MAE of 1% and an RMSE of 4.0165. Lin et al. [111] proposed the SA-PCA-CNN model for SOH estimation, integrating multi-source features including electrical, thermodynamic, and electrochemical parameters. Their model utilized dimensionality reduction and feature extraction techniques, achieving an MAE of 0.24% and RMSE of 0.31%. Xu et al. [112] developed a hybrid CNN-DNN model for RUL estimation on the A123 dataset, incorporating a non-linear correlation-based feature selection method and a novel snapshot ensemble learning strategy, yielding an RMSE of 114.05 cycles and an MAPE of 11.31 cycles.

Fei et al. [113] introduced the Bi-ViT-DSA model, which combines a bilateral-branched visual transformer with dilated self-attention for SOH estimation. Their approach considered partial charging scenarios, including fast charging and CC-CV protocols, and achieved an RMSE of 1.14% and MAE of 0.98% across multiple datasets. Qian et al. [110] proposed the CNN-SAM-LSTM model by serially combining CNN, self-attention, and LSTM layers for SOC and SOH estimation. Using a joint loss function to balance learning, their model achieved MAE and RMSE values below 0.621% and 0.892%, respectively. Xiong et al. [114] implemented a CNN-LSTM hybrid model with an efficient preprocessing algorithm to handle incomplete charging segments, reporting an RMSE of 2.74%. Lastly, Liu et al. [115] utilized the BLP-Transformer architecture in a blockchain-based deep learning framework, achieving RMSE and MAPE values of 11.68 and 1.079 on the Toyota dataset. A summary of recent hybrid approaches for SOH and RUL estimation can be found in Table 5.

7.2. Transfer learning

ML, deep learning, and hybrid models for SOH and RUL estimation typically assume that the training and testing data come from the same domain and require large datasets, extensive training time, and significant computational resources. In other words, in real-world scenarios, obtaining such data and resources is challenging. To address this problem, TF can be used to reuse models that were previously trained on one specific task for other/related tasks. This enables knowledge sharing and reduces training time and resource requirements. In EV applications, battery variations can complicate deep-learning model migration. Sheng et al. [123] proposed a cross-manifold TL method for low-dimensional data, which enables reliable SOH estimation using only 20% of the target battery data. Ma et al. [42] tackled data distribution variations across different battery datasets using TL for better SOH estimation. Yao et al. [82] improved predictive accuracy for six batteries using TL, while Deng et al. [1] leveraged early aging data for DP recognition and TL and improved SOH estimation by learning features from a new cell. Chen et al. [124] implemented an LSTM-FC network with TL for RUL prediction, using Complementary Ensemble Empirical Mode Decomposition and PCA to reduce computational complexity and effectively separate capacity regeneration. However, TL carries the risk of negative transfer if the source and target tasks differ significantly, which can result in poor performance. In addition, overfitting may occur if the pre-trained model is not properly fine-tuned.

7.3. Physics-informed model

Unlike purely data-driven models, physics-informed models leverage universal physical principles, enabling better generalization to unseen conditions. By incorporating physical constraints into supervised learning tasks, these models achieve a balance between data-driven learning and physics-based reasoning, enhancing robustness across diverse operating scenarios. In [84], a physics-informed machine learning (PIML) approach was proposed for modeling battery degradation and predicting RUL under varying conditions. The method first used a CCA model to capture linear degradation based on stress factors like temperature, SOC, cycle time, rest time, and C-rate. This was integrated with an LSTM network to form a Physics-Informed LSTM (PI-LSTM) model, which refined predictions using real-time data (voltage, current, temperature). The PI-LSTM accurately estimated capacity fade, and a secondary LSTM model was then used to learn degradation trends for RUL prediction.

Xu et al. [125] proposed a physics-informed dynamic deep autoencoder for SOH estimation, combining physics-informed training with a physics-based adjustment module to enhance prediction accuracy. Similarly, Hofmann et al. [126] introduced a physics-informed neural network (PINN) with a pseudo-two-dimensional Newman model for

Table 5
Summary of Publications Classified by Hybrid Models.

Publications	Hybrid Models	Year	Estimation	Operation	Dataset	Performance Metrics	Complexity
Couture et al. [116]	TLPH	2022	RUL	offline	MIT/Stanford	Accuracy: 87.98%	–
Xu et al. [112]	Hybrid CNN	2023	RUL	offline	A123 dataset	RMSE: 114.05 cycle	Moderate
Fei et al. [113]	Bi-ViT-DSA	2023	SOH	online	MIT-Stanford, CALCE	RMSE: 1.14%	–
Liu et al. [115]	BLP-Transformer	2023	RUL	–	Toyota	RMSE: 11.68 cycle	High
Ma et al. [3]	ECSSA-KDCN	2024	RUL	offline	–	RMSE: 4.0165	–
Lin et al. [111]	SA-PCA-CNN	2024	SOH	online	Oxford	RMSE: 0.31%	Moderate
Rastegarpanah et al. [117]	CLDNN, TL	2024	RUL	online	Custom	RMSE: 0.8218	–
Qian et al. [110]	CNN-SAM-LSTM	2024	SOH	online	Custom	$RMSE < 0.892\%$	Moderate
Xiong et al. [114]	CNN-LSTM	2024	SOH	online	Custom	RMSE < 1.58%	Moderate
Xiang et al. [5]	Bi-GRU	2024	SOH	online	NASA, KIT	MAPE < 3.98%	Moderate
Cho et al. [118]	Bayesian optimizer LSTM	2024	SOH	–	Custom	RMSE < 0.7133	Moderate
Ansari et al. [119]	CNN-BiLSTM	2024	SOH	online	Custom	RMSE < 0.021	High
Cho et al. [120]	CMMOG	2025	SOH	–	NASA	MAE < 0.3991%	High
Li et al. [121]	PSO-BiLSTM+EKF	2025	SOH	–	Custom	RMSE = 0.4306%	High
Zhu et al. [122]	TCN-BiLSTM-Attention	2025	SOH	–	NASA & Oxford	MAE < 0.5652%	High

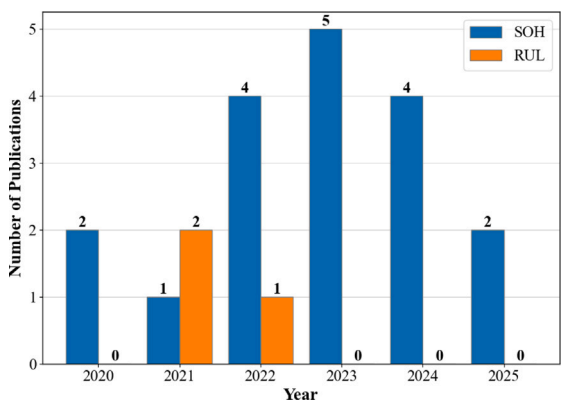

Fig. 13. Annual distribution of publications on other data-driven models.

data generation, embedding physicochemical knowledge to achieve RMSEs below 2%. Kohtz et al. [127] developed a PIML approach using partial charging data. Their method integrates finite element modeling with NASA datasets and employs GPR for mapping voltage curves to SOH, reducing model parameters from 425 to 212 while maintaining RMSE under 15.73 cycles. Sun et al. [7] proposed a batteryPINN that embeds physical constraints, specifically, monotonic peak internal capacity (P-IC) and SOH, into model training, achieving MAE and RMSE below 0.4%. Liu et al. [4] proposed a battery SOH estimation model that combines the Hilbert cumulative residual entropy algorithm (RCMHCRE) with a battery PINN. In this framework, RCMHCRE is employed to extract high-quality features, while the battery PINN captures the underlying relationship between input features and SOH, ensuring consistency with physical laws. The PINN model is grounded in the physics of solid electrolyte interphase membrane growth.

7.4. Other models

Despite the success of data-driven models to estimate SOH and RUL, some researchers use custom or modified traditional models to overcome limitations and enhance the sequence-capturing capabilities. A summary of Publications Classified by other data-driven Models can be found in Table 6. Fig. 13 illustrates the growing trend in research publications on SOH and RUL estimations using other data-driven models from 2020 to 2025. It highlights the increasing reliance on neural architectures. Neural networks, including FNN, Extreme Learning Machines (ELM), and BPNN, are flexible models capable of capturing complex relationships. Kheirkhah et al. [43] employed a FNN with a novel HI, termed reference-based charging time, for SOH prediction and achieved an RMSPE of 0.43%. Pan et al. [128] used ELM and backpropagation neural network models, which demonstrated robustness against varying loading profiles, reporting an RMSE of 0.0109. Li et al. [129] proposed an adaptive GA combined with BPNN to handle partial charging and discharging scenarios in SOH estimation, achieving an MAE of 0.03715. Moreover, specialized neural network architectures such as independently RNNs (IndRNN) and Bayesian neural networks (BNN) have been explored to enhance temporal dependency modeling and uncertainty quantification in SOH estimation.

Zhang et al. [14] employed Bayesian models to address the challenges posed by dynamic operational conditions and cell-to-cell variations in SOH estimation, achieving a MAPE of 3.899%. Jiang et al. [130] utilized a BNN model, reporting a MAPE of 2.13%, highlighting its capability in both accurate estimation and uncertainty quantification. Du et al. [131] combined a nonlinear autoregressive exogenous (NARX) network with PCA and achieved an MAE of 0.68%. Wu et al. [132] adopted an IRBFNN enhanced with a polynomial trend component to handle local deviation, reporting an error of ±4% on CALCE and NASA datasets. Bao et al. [133] proposed an ICNN model that leverages global and local context embeddings for sequence-independent SOH estimation, achieving MAE values of 0.54% and 1.20%, demonstrating the utility of incremental learning. Furthermore, several studies highlighted the adaptability of ANN-based models, with Bonfitto et al. [134] and Ezemobi et al. [135] reporting accuracies of 97% and 96.7%, respectively. Despite their success, neural networks are computationally expensive and prone to overfitting on small datasets. Advanced architectures like IndRNNs, BNNs, and hybrid models continue to improve the accuracy and robustness of SOH and RUL prediction.

8. SOH and RUL co-estimation

Traditionally, a single model was designed to estimate either SOH or RUL, but recent trends emphasize simultaneous SOH and RUL estimation to reduce model requirements and computational costs. Table 7 summarizes recent studies on this topic. Zhang et al. [30] used GPR for joint SOH and RUL predictions but did not provide specific performance metrics, which emphasizes the need for further validation. Zhao et al. [143] proposed an ML-based SOH and RUL co-estimation model using a custom dataset composed of 420 cells and 9 EV cells cycled under real-world operating conditions. Their model is designed to handle noise effectively and enhance generalization by leveraging meta-level features.

Bracale et al. [31] investigated linear models such as ARIMAX, B-MLR, and BB-MLR, along with Linear Quadratic Regulator techniques. Battery data was obtained through accelerated degradation testing, and feature selection involved both differentiable and non-differentiable methods. Their model achieved a quantile score of 3.50, an MAPE of 0.35, and an RMSE of 0.40 on the NASA and CALCE datasets. In

Table 6
Summary of Publications Classified by other models.

Publications	Models	Year	Estimation	Operation	Dataset	Performance Metrics	Complexity
Bonfitto et al. [134]	ANN	2020	SOH	offline	–	Accuracy: 97%	Moderate
Naha et al. [136]	ANN	2020	SOH	online	Custom	MAE: less than 1%	Moderate
Ansari et al. [137]	BPNN	2021	RUL	offline	NASA	RMSE: 0.0819%	Least
Li et al. [129]	Neural Network	2022	SOH	–	NASA	RMSE: 0.02663	Moderate
Ezemobi et al. [135]	ANN	2022	SOH	–	–	Accuracy: 96.7%	Moderate
Wu et al. [132]	IRBFNN	2022	SOH	offline	CALCE, NASA	Estimation error: ±4%	–
Bao et al. [133]	ICNN	2023	SOH	online	CALCE, NASA	MAE: 0.54%	–
Kheirkhah et al. [43]	FNN	2023	SOH	–	Severson	RMSPE: 0.43%	Least
Du et al. [131]	NARX-NN	2023	SOH	offline	NASA, Oxford	RMSE: 0.79%	–
J. Obregon et al. [138]	CAE-DNN	2023	SOH	offline	NASA	RMSE: 0.0112	–
Zhang et al. [14]	Bayesian ML models	2023	SOH	online	Custom	MAPE: 3.899	–
Jiang et al. [130]	BNN	2024	SOH	–	Custom	RMSE: 0.0178	Moderate
Njoku et al. [139]	XAI	2024	SOH	–	NASA	MAE: 0.5469	High
Lv et. al. [140]	ANN	2024	SOH	offline	Custom	RMSE < 0.7368	Moderate
Lin et al. [141]	IndRNN	2024	SOH	–	Oxford	RMSE: 0.42	–
Liu et al. [4]	RCMHCRE-batteryPINN	2025	SOH	offline	FU, XJTU, & TJU	RMSE < 0.2761%	Moderate
Lin et al. [142]	TSPINN	2025	SOH	–	Custom	MAE < 0.0082	Low

Table 7
Summary of Publications Classified by SOH and RUL Co-estimation.

Publications	Models	Year	Estimation	Operation	Dataset	Performance Metrics	Complexity
Cui et al. [144]	LSTM	2020	SOH, RUL	online	NASA	RMSE: 0.0002523	Moderate
Zhang et al. [30]	GPR	2020	SOH, RUL	–	In-house	–	–
Bracale et al. [31]	SA-BB-MLR	2021	SOH, RUL	offline	NASA, CALCE	MAPE: 0.23	–
Chen et al. [32]	LSTM	2021	SOH, RUL	offline	NASA	RMSE < 0.0022	Moderate
Li et al. [146]	CNN-ASTM-LSTM	2021	SOH, RUL	online	NASA	RMSE: 0.0072	High
Bamati et al. [145]	NARXRNN	2021	SOH, RUL	online	NASA	MAE < 2%	–
Xu et al. [28]	LSTM	2022	SOH, RUL	online	Custom	RMSE: 0.010246%	Moderate
Ma et al. [147]	LSTM	2022	SOH, RUL	offline	NASA	MAE < 1.20%	Moderate
Ma et al. [42]	DBN-LSTM	2022	SOH, RUL	online	NASA	MAE: 0.02747	Moderate
Kim et al. [29]	KIRNN	2022	SOH, RUL	online	–	RMSPE: 0.2%	–
Kim et al. [29]	KIRNN	2022	SOH, RUL	online	–	RMSPE: 0.2%	–
Zhao et al. [143]	Stacking Ensemble	2023	SOH, RUL	online	Custom	RMSPE: 0.55%	Moderate
Hu et. al [105]	LSTM	2023	SOH, RUL	–	Custom	RMSE: 1.85	Moderate
Chen et. al [148]	CNN-BiLSTM-BiGRU-AM	2024	SOH, RUL	–	NASA, CALCE	RMSE < 2.22%	High
Ansari et. al [10]	CFNN	2024	SOH, RUL	–	MIT-Stanford	RMSE < 1.75	–
Qu et. al [149]	LOWESS-ELM-LST	2024	SOH, RUL	–	Oxford, CALCE	Mean RE: 4.57%	–
Zheng et al. [150]	ODBN-BA	2025	SOH, RUL	offline	NASA, CALCE	MAE < 6.6325×10^{-4}	–
Qu et. al [151]	MC-CNN-TimesNet	2025	SOH, RUL	–	NASA, CALCE, & MIT	RMSE < 1.5%	High
Jia et. al [152]	KAN-HDBLSTM-AM	2025	SOH, RUL	–	NASA, XJTU	RMSE < 0.005	High

contrast, LSTM networks have demonstrated strong capabilities for co-estimation tasks due to their ability to capture long-term temporal dependencies. Xu et al. [28] reported an RMSE of 0.010246% using an LSTM-based approach. Similarly, Cui et al. [144] employed LSTM and achieved an RMSE of 0.0002523 and a MAPE of 0.0324, indicating the high precision of LSTM for battery state estimation. Hu et al. [105] further advanced LSTM applications and obtained an RMSRE of 0.013 and an RMSE of 1.85 on a custom dataset.

Ma et al. [42] combined Deep Belief Networks with LSTM to address the issue of nonuniform data distribution between training and testing datasets, achieving an MAE of 0.02747 and an MSE of 0.00217. This highlights the effectiveness of integrating diverse learning paradigms. Kim et al. [29] introduced the Kernelized Intermittent RNN model to tackle challenges in onboard SOH monitoring, reporting an MAPE of 0.21% and an RMSPE of 0.2%, demonstrating its capability in managing irregular time-series data. Similarly, Bamati et al. [145] employed FFNN and NARX-RNN models to reduce computational load in online state prediction, achieving both RMSE and MAE below 2%. These findings underscore the robustness and versatility of such architectures. Overall, these studies reflect the increasing focus on co-estimation models and the promise of hybrid and specialized neural networks in effectively handling the complexities of simultaneous SOH and RUL estimation.

9. Evaluation metrics

Evaluating the performance of prediction and estimation models is essential to ensure their reliability and effectiveness. This evaluation is typically conducted using various statistical metrics such as Mean Absolute Error (MAE), Mean Squared Error (MSE), and Root Mean Squared Error (RMSE), among others. These metrics provide valuable insights into model characteristics, including bias, variance, scale dependency, and overall prediction or estimation accuracy. Table 8 presents a comparative analysis of commonly used evaluation metrics, highlighting their differences in terms of scale dependency, symmetry, sensitivity to large errors and outliers, ability to handle zero values, and primary focus.

- **MAE:** MAE measures the average absolute deviation between the true values and the predicted values. It is mathematically defined by Eq. (27), where y_i represents the true value and $\hat{y}_i$ denotes the predicted value. MAE provides an intuitive understanding of the average magnitude of prediction errors, indicating how far predictions deviate from actual values on average. While it is simple to compute and interpret, and relatively robust to outliers, a key limitation of MAE is that it does not account for the scale

Table 8
Comprehensive comparison of different commonly used evaluation metrics.

Metric	Scale dependent	Symmetric	Penalizes large errors	Handles zero values	Robust to outliers	Focus
MAE	✓	✓	✗	✓	✓	Average magnitude of absolute terms
MSE	✓	✓	✓	✓	✗	Highly focus on large errors
RMSE	✓	✓	✓	✓	✗	Similar to MSE but in original scale of data
MAPE	✗	✗	✗	✗	✓	Average relative error in percentage
R^2 Score	✗	✓	✓	✓	✗	Proportion of variance of the model output

of the data.

$$\text{MAE} = \frac{1}{n}\sum_{i=1}^{n}|y_i - \hat{y}_i| \quad \text{range:}[0,\infty) \tag{27}$$

- **MSE:** MSE computes the average of the squared differences between the actual and predicted values, as defined in Eq. (28). Due to the squaring of errors, MSE disproportionately penalizes larger deviations, making it highly sensitive to outliers. While this characteristic can be useful in applications where large errors are particularly undesirable, it also makes MSE less interpretable and more influenced by extreme values compared to other metrics.

$$\text{MSE} = \frac{1}{n}\sum_{i=1}^{n}(y_t - \hat{y}_i)^2 \quad \text{range:}[0,\infty) \tag{28}$$

- **RMSE:** It is defined as the square root of the MSE, as shown in Eq. (29). It measures the average magnitude of the error between actual and predicted values. Like MSE, RMSE penalizes larger errors more heavily due to the squaring of residuals, making it sensitive to outliers. However, unlike MSE, RMSE is expressed in the same units as the original data, which enhances its interpretability and makes it more suitable for evaluating model performance in practical applications.

$$\text{RMSE} = \sqrt{\text{MSE}} = \sqrt{\frac{1}{n}\sum_{i=1}^{n}(y_t - \hat{y}_i)^2} \quad \text{range:}[0,\infty) \tag{29}$$

- **MAPE:** The MAPE, defined in Eq. (30), measures the average percentage difference between actual and predicted values. It provides an intuitive understanding of relative error and is useful when sensitivity to proportional deviations is desired. However, MAPE is undefined for zero actual values and can be unreliable for very small targets, limiting its use to strictly positive data.

$$\text{MAPE} = \frac{1}{n}\sum_{i=1}^{n}\left|\frac{y_t - \hat{y}_t}{y_t}\right| \times 100\% \quad \text{range:}[0,\infty) \tag{30}$$

- R^2 **score:** The R^2 score, also known as the coefficient of determination, measures how well the predicted values approximate the actual data. It indicates the proportion of variance in the dependent variable explained by the independent variables and is defined in Eq. (31), where $\bar{y}_i$ represents the mean of the true values.

$$R^2 = 1 - \frac{\sum_{i=1}^{n}(y_i - \bar{y}_i)^2}{\sum_{i=1}^{n}(y_i - \hat{y}_i)^2} \quad \text{range:}(-\infty, 1) \tag{31}$$

10. Discussion

10.1. Model comparison

In recent years, a wide range of models has been used for handling predictive and estimation-based tasks, across like SOH and RUL estimation. These models vary significantly in terms of architecture, memory requirements, computational complexity, overfitting tendencies, and application areas. Table 9 summarizes the key characteristics, strengths, weaknesses, and typical use cases of several widely used models, categorized into Machine Learning, Deep Learning, and Advanced Models. Machine Learning models such as regression techniques, GPR, XGBoost, CatBoost, and SVM are primarily suited for structured data. Regression models and SVMs are relatively simple to implement and require moderate memory and computational resources. However, models like GPR face scalability issues due to their high memory complexity, typically $\mathcal{O}(n^3)$, where n is the number of training samples. Ensemble methods like XGBoost and CatBoost provide high predictive power but may suffer from overfitting if hyperparameters are not carefully tuned.

Deep Learning models, including RNN, LSTM, GRU, and CNN, are capable of automatically extracting complex hierarchical features, especially from unstructured data like images, text, and sequences. These models often demand large computational resources (e.g., GPUs) and high memory due to millions of trainable parameters. RNNs are prone to vanishing or exploding gradient problems, which LSTM and GRU architectures help mitigate. Nevertheless, due to their large capacity, deep learning models are inherently susceptible to overfitting, particularly when training data is limited. Advanced models such as hybrid architectures, TF, and transformers represent cutting-edge strategies to enhance model efficiency and performance. Hybrid models combine multiple learning paradigms but add complexity to model design and debugging. TF significantly reduces training time and memory requirements by leveraging pre-trained models, although domain adaptation remains a critical challenge. Transformers, based on self-attention mechanisms, excel in capturing long-range dependencies while offering parallelizable computations. However, they are highly resource-intensive, with both memory and computational complexity growing quadratically with sequence length, leading to increased training times and risk of overfitting if not properly regularized.

10.2. Handling of noisy data

Noisy data can significantly impair the accuracy of SOH and RUL predictions for EV batteries because it can obscure critical trends and complicate feature extraction. Moreover, the noise can destabilize models, which leads to inconsistent predictions and overfitting, where the model fits noise rather than the underlying patterns, which reduces generalization. Noise may also distort key battery-degradation indicators like voltage and impedance, and complicate accurate modeling of the aging process [61]. To address this, various noise-reduction strategies were proposed, including data preprocessing, noise filtering, and robust algorithms. For example, Maleki et al. [61] used the S–G filter for noise removal, while Zhao et al. [91] applied a KF to smooth the temperature curves.

TF, where pre-trained models on clean datasets are used, is another emerging method to improve predictions in noisy environments [82]. Other techniques like Empirical Mode Decomposition (EMD) for noise reduction and anomaly detection methods [19] have also proven effective. Chen et al. [32] and Yao et al. [82] combined filtering methods like Discrete Wavelet Transform (DWT) and kernel smoothing and successfully improved data quality for RUL estimation. In addition, Wei et al. [153] employed stacked autoencoders to facilitate noise reduction and dimensionality reduction, which enhanced SOH and RUL estimation accuracy significantly. These studies highlight the importance of handling noisy data to improve prediction reliability and battery state estimation, highlighting the value of advanced noise-reduction techniques and hybrid models in real-world scenarios.

Table 9
Comparison of commonly used AI-based models for SOH and RUL estimation.

Category	Model	Type	Advantage	Disadvantage
Machine Learning	Regression models	Supervised	Simple, interpretable, fast	Poor on complex data
	GPR	Probabilistic, Supervised	Uncertainty estimation, flexible	Computationally expensive
	XGBoost	Ensemble)	High accuracy, robust to missing data	Overfitting if not tuned
	CatBoost	Ensemble	Handles categorical features well	Longer training time sometimes
	SVM	Supervised	Effective in high dimensions	Slow for large datasets
Deep Learning	RNN	Neural network	Good for sequence data	Vanishing gradient issue
	LSTM	RNN variant	Solves vanishing gradient	Complex, slower training
	GRU	RNN variant	Faster than LSTM	Sometimes less powerful
	CNN	Neural network	Excellent for images, patterns	Needs large data
Advanced Models	Hybrid model	Combination	Leverages multiple models' strengths	Complex to design
	TF	Pre-trained model adaptation	Reduces data requirement	Domain mismatch issues
	Transformer	Attention-based network	Long-range dependencies, parallelizable	Resource-intensive

10.3. Partial charging/discharging data

Using partial charging and discharging data for SOH and RUL estimation is practical in real-world EV applications where complete charge–discharge cycles are difficult to obtain due to irregular usage and operational constraints. Partial cycles are more reflective of typical EV usage and reduce the data collection time without affecting regular battery operation. Moreover, charging, following a CC-CV protocol, provides more accessible data compared to the randomness of discharging. Several studies demonstrate the effectiveness of using partial data. Shu et al. [59] demonstrate that variations in partial charging voltage curves correlate with battery aging. Rahimian et al. [154] and Beltran et al. [155] leveraged narrow SOC windows for dynamic driving cycles and RUL estimation, respectively. Naha et al. [136] and Wu et al. [156] showed that short data segments are sufficient for accurate SOH prediction. In addition, Fei et al. [113] and Feng et al. [157] validated the use of partial charging data for SOH monitoring. These studies underline the practical aspects of using partial data for effective battery health management in the real world.

10.4. End-to-end approach

Traditional methods for SOH and RUL prediction often rely on manual feature extraction, requiring domain expertise and missing complex patterns in the data. These methods have separate steps for preprocessing, feature engineering, and model training, which increases workflow complexity and error risks. They also struggle with real-time predictions due to speed and scalability issues. End-to-end models address these challenges by learning features directly from raw data, capturing complex relationships, and unifying preprocessing, feature extraction, and model training into a seamless pipeline. This reduces computational overhead and human intervention, making them ideal for real-time applications. For example, [146] introduced a CNN-ASTLSTM approach, while [158,159] used convolutional autoencoders for automatic feature extraction. Other studies, like [86,133], also highlight the effectiveness of end-to-end frameworks in improving prediction accuracy and efficiency.

10.5. Multi-stage approaches

Several studies highlight the benefits of a multistage approach for RUL estimation to capture the complexities of battery behavior. Battery degradation involves both global trends and local fluctuations like capacity regeneration, which are challenging to model using a single method. A multi-stage framework divides the task into stages, where each focuses on different data aspects. For instance, [19] proposed a two-stage method where RUL is first predicted using classification. This is followed by a precise estimation with regression to reduce computational overhead. Similarly, [160] combined EMD, DNN, and LSTM models to predict RUL. The group used EMD to separate data into two components: global deterioration and capacity regeneration components. The LSTM and DNN models independently predicted each component, and their results were combined to estimate RUL.

10.6. Real-world data and deployment

Real-world vehicle data is essential for accurate SOH and RUL predictions, as it reflects actual battery performance under diverse conditions, such as driving behaviors, environmental factors, and charging practices. Unlike simulated data, real-world data accounts for factors like temperature fluctuations and partial charging cycles that influence battery aging. The NASA Random Walk Dataset, commonly used in battery research, captures dynamic charging and discharging behavior, making it ideal for SOH and RUL prediction models. For example, [15,161] used the NASA dataset to model EV load profiles and estimate RUL. Other studies, like [60,162], utilized real-world data from thousands of EVs, applying feature extraction and model optimization techniques to predict SOH under various conditions. Additionally, [163] used LSTM networks trained on in-vehicle data for real-time SOH updates through virtual battery tests. Several studies have demonstrated the feasibility of deploying AI-based models in offline BMSs. For instance, Crocioni et al. [79] implemented an artificial neural network (ANN) model for SOH estimation on a microcontroller-based BMS by converting the model into ANSI C code. However, this process involved quantizing the model weights, which led to a reduction in accuracy.

To address complexity and overfitting issues, Shi et al. [84] applied regularization techniques to an LSTM model, enabling better generalization across different datasets while also lowering computational demands. In general, researchers have adopted feature selection techniques such as PCA and PCC, along with parameter optimization methods like PSO and GA, to reduce model complexity and enhance deployment efficiency. Among deep learning approaches, CNN-based models have shown greater practicality for deployment, as they naturally support parallel computation and efficient memory utilization, leading to improved computational performance and predictive accuracy. Chen et al. [86] employed PCA to reduce the dimensionality of an embedded feature vector from 1000 to 32, significantly decreasing model complexity. Li et al. [87] proposed a collaborative framework that combines offline training and feature extraction with online deployment to serve multiple EVs. Their approach minimizes cloud-side computational overhead by performing heavy processing tasks offline.

10.7. Digital twin and blockchain

The integration of digital twin and blockchain technologies has also emerged as a promising approach for accurate and secure SOH and RUL predictions in EVs. A digital twin is a virtual representation of a physical asset, such as an EV battery, that mirrors its real-time behavior, condition, and performance through continuous data exchange. Digital

twins can receive data from the battery in real time, which enables the tracking of key parameters like voltage, temperature, and charge/discharge cycles. In [63], a model incorporating a digital twin for the BMS is used to analyze feature correlations, improve battery management, and enhance safety, reliability, and performance. In addition, [139] demonstrated the effectiveness of DNN and LSTM in digital twins and introduced XAI methods to clarify model predictions.

A blockchain, which is essentially a decentralized, immutable ledger, ensures the authenticity and security of battery data for SOH and RUL predictions by preventing tampering or unauthorized modifications. [115] proposed a blockchain-based platform for RUL prediction in the Internet of Vehicles (IoV) by utilizing a BLP-transformer algorithm that improves both interpretability and accuracy. This was done by focusing on short-term degradation data relationships. The system also includes a data-keeper protocol to manage vehicle identity and secure data storage. Evaluations on a public dataset demonstrate its high precision and strong interpretability in predicting battery life.

10.8. Image modality

Transforming time series data into images has emerged as a powerful technique to leverage the strengths of computer vision and deep learning models, which excel in processing image data. This approach has gained significant traction across various domains, including the medical field and defense technology, where innovative applications are transforming how data is analyzed. In the medical sector, this technique is revolutionizing diagnostics, such as predicting heart diseases by converting one-dimensional ECG signals into image formats using methods like wavelet transforms [164]. These images capture intricate patterns in the data, allowing deep learning models to analyze them with remarkable precision and efficiency. Similarly, in defense and surveillance, the transformation of one-dimensional RF signatures from drones into image formats enables accurate drone detection [165]. By visualizing these signals, machine learning models can identify unique patterns, improving detection accuracy while reducing computational complexity. Battery experts often emphasize that various shape features within the voltage profile image hold significant information about battery performance. Building on this insight, this study [86] utilized long-term cycling data from hundreds of large-format pouch cells, encompassing over 2 million cycles tested across 1000 days. For the first time, the authors demonstrated that RUL can be accurately predicted by learning from battery voltage profile images rather than relying solely on voltage values. This led to the development of an end-to-end approach for predicting battery RUL, using data from only a few previous cycles at any given time during the cycling test. In [116], the authors converted current, capacity, and voltage data into images, effectively capturing the entire battery's charging and discharging cycles in a single input. This method also offers the advantage of minimal preprocessing requirements.

10.9. Vehicle-cloud collaboration

Vehicle-cloud collaboration refers to the integration of cloud computing and connected vehicles to enhance transportation systems by enabling data sharing, processing, and collaboration between vehicles and cloud infrastructure. This concept underpins advancements in intelligent transportation, autonomous driving, and vehicle fleet management. One study [93] introduced a collaborative vehicle-cloud model that was designed for accurate real-time battery state estimation. Within this model, the cloud platform served as a repository for extensive historical battery data. Moreover, EVs operating within a networked road environment were capable of accessing real-time networked information. In [166], a framework based on cloud computing has been developed. This framework involves generating field data, uploading it to the cloud, and employing a transformer model to learn the high-dimensional parameters of the battery system.

10.10. Multi-cycle ahead prediction

Predicting SOH over multiple cycles allows fleet operators or individual users to schedule maintenance or replacement *proactively*, which avoids unexpected failures and ensures vehicle reliability. Moreover, it enables timely interventions and reduces the risk of sudden breakdowns that could compromise safety or lead to costly repairs. In [145], an adaptive model to predict SOH 30 cycles was developed. The study introduced a nonlinear autoregressive with an external input RNN (NARXRNN) model that was chosen for its low computational burden. Experimental results demonstrated excellent performance on unseen data, with an RMSE and MAE within 3% and 2%, respectively.

10.11. Practical considerations for real-world deployment

The deployment of AI models for SOH and RUL estimation in real-world applications, such as EVsposes challenges that go beyond laboratory-level performance. These include the need for computational efficiency, interpretability, scalability, generalization to unseen conditions, real-time processing, and seamless integration with existing BMS. Traditional ML models are typically more interpretable and computationally efficient, making them well-suited for embedded applications. However, they often lack the predictive power required to capture the complex nonlinear degradation patterns of LIBs. For instance, Wen et al. [72] proposed an N-CatBoost-based model for SOH estimation, achieving a low RMSE of 1.15%. While the model offers high interpretability, it relies on a large number of input features, which limits its practicality for real-time and resource-constrained applications.

In contrast, DL models can automatically extract complex features and typically provide higher accuracy due to their hierarchical learning capabilities. However, they are computationally intensive and less transparent, and are prone to challenges such as vanishing or exploding gradients, especially in deep recurrent architectures. To address these issues, Ansari et al. [10] introduced a novel model based on a CFNN, which achieved a reduction in RMSE from 1.76% to 1.22% while maintaining a relatively simple architecture and consistent performance across multiple datasets. Similarly, Chen et al. [148] reported significant performance improvements of 55.4% over CNN-based methods and 18.4% over traditional ML techniques, but at the cost of substantially increased computational complexity. To keep a balance between performance and practicality, advanced architectures such as hybrid models and transformer-based networks have gained attention. These models enhance temporal sequence modeling and accuracy but often introduce greater complexity and deployment overhead. Notably, Qu et al. [149] demonstrated that both SOH and RUL can be estimated using a single input parameter, significantly reducing data requirements and model complexity, an important advancement for real-world implementation.

11. Future research directions

Various AI models have been developed to estimate SOH and RUL, which contributes to the safer and more reliable use of EV batteries while improving battery assessment and reliability. However, despite many significant advancements, several challenges and research gaps remain, particularly in areas such as advanced battery materials, emerging technologies, and more accurate modeling techniques. This section summarizes these challenges and outlines promising future research directions, which highlight the need for continued innovation to improve BMS and support the integration of new battery technologies.

11.1. Model for advanced batteries

Although LIB technology has made significant strides and is the backbone of modern electronics and power systems, particularly in transportation, new battery materials and technologies are rapidly evolving. These advanced batteries offer enhanced safety, reliability, higher energy densities, improved life-cycle durability, reduced energy loss, and lower environmental impact. However, the characteristics of these materials often differ from LIBs, especially regarding temperature responses, aging processes, and charge imbalances. For example, lithium manganese oxide batteries feature high voltage and reasonable safety, but often have insufficient capacity and lifespans. In addition, advanced technologies such as cross-linked $K_2Ti_4O_9$ nanoribbon arrays for LIBs [167], which enhance battery capacity, and novel anode materials like the Mg_2Sn anode [168], electron affinity and ionization energy prediction [11], etc. are contributing to improvements in LIB performance and influencing their degradation behavior. These advancements present new challenges for developing data-driven models to estimate SOH and RUL accurately for emerging battery technologies. Adapting existing models to account for the unique properties of these advanced batteries is crucial to meet the evolving demands of energy storage systems.

11.2. Hybrid models and optimization

In recent years, hybrid modeling approaches (which combine multiple baseline models in series or parallel configurations) have gained popularity for enhancing the accuracy of SOH and RUL estimation. By leveraging the strengths of different models, these approaches aim to provide more accurate results. However, determining the optimal model configuration and selecting the best models for specific tasks remains challenging. Another crucial problem is the selection of appropriate training parameters. Building effective hybrid models requires careful hyperparameter tuning and thoughtful model structure design. The proper choice of input parameters, network architecture, training methods, and activation functions is essential to avoid problems like data overfitting and underfitting. Conventional trial-and-error methods for parameter selection are time-consuming and require extensive human expertise. Therefore, developing advanced optimization techniques for efficient hyperparameter fine-tuning and model design is critical to further advancing hybrid modeling for SOH and RUL estimation.

11.3. Generative AI

Generative AI, particularly with advancements in models like Generative Adversarial Networks (GANs), Variational Autoencoders, and transformer-based architectures, holds significant potential in improving battery SOH prediction. One of the key challenges in battery SoH prediction is the lack of large, diverse datasets, as battery degradation tests are time-consuming and expensive. Obtaining real-world data, such as driving scenarios, can also be hindered by missing data due to measurement noise and faulty sensors. Generative AI can be used to generate synthetic battery aging data that mimics real-world conditions. This can augment existing datasets, making it easier to train machine-learning models on a wide variety of conditions and usage patterns.

11.4. Advanced Explainable AI

As AI models become increasingly complex and are deployed in critical applications like RUL prediction, understanding the reasoning behind their outputs becomes essential. These models often function as 'black boxes,' offering high accuracy but limited interpretability. Explainable AI (XAI) aims to bridge this gap by providing insights into model behavior, thereby enhancing trust, transparency, and reliability. This is particularly crucial in EV applications, where users and engineers must understand why a model estimates a specific SOH value or predicts a certain RUL. Recent research has begun to explore this area. For example, Wang et al. [169] proposed an end-to-end explainability-driven model for improved SOH estimation. Popular methods such as Shapley Additive Explanations (SHAP) and Local Interpretable Model-Agnostic Explanations (LIME) have shown promise in explaining model outputs. However, their effectiveness decreases with increasing model complexity, which highlights the need for more advanced and domain-specific XAI approaches. Addressing these challenges represents a key direction for future research in trustworthy battery diagnostics.

11.5. Internet of Vehicle (IoV)

The integration of the IoV with AI-driven SOH and RUL estimation presents transformative opportunities for vehicle prognostics and maintenance. Future advancements in IoV can enhance real-time data acquisition from connected vehicles, enabling more accurate and dynamic SOH and RUL predictions. By leveraging vehicle-to-everything (V2X) communication, AI models can aggregate diverse datasets, such as battery performance, driving patterns, and environmental conditions, across fleets, improving model generalization and predictive precision. Additionally, edge computing within IoV frameworks can facilitate on-board AI processing, reducing latency and enabling proactive maintenance decisions. Research should focus on developing secure, scalable IoV architectures to support federated learning [170], ensuring privacy-preserving AI model training across distributed vehicle networks. These advancements will drive smarter, safer, and more sustainable automotive ecosystems.

11.6. Quantum deep learning

Quantum deep learning is an emerging field at the intersection of quantum mechanics and deep learning that leverages qubits—the quantum counterpart of classical binary bits. These qubits represent a superposition of states (zero and one at the same time) and offer a powerful way to process information. While quantum computing is still in its infancy, machine learning methods that incorporate quantum principles are being developed to run on classical devices. Quantum Neural Networks (QNNs) can already be simulated on classical computers using software like Qiskit and Cirq or through hardware-optimized packages such as Intel QS and NVIDIA cuQuantum. However, classical computers have limitations, such as a high memory requirement due to the exponential growth of the Hilbert space and susceptibility to noise. However, despite these severe constraints, quantum simulations remain useful for algorithm research and debugging. Quantum deep learning can also improve existing methods, like classical deep learning or digital twins, and contribute to increased prediction accuracy. By integrating quantum deep learning with digital twins, the complex chemical processes involved in battery degradation can be simulated more precisely and provide better insights into the SO of a battery.

12. Conclusion

As the BMS continues to evolve with the increasing demand for EVs, the accurate estimation of SOH and RUL has become critical. This review provides valuable insights into the recent trends and research surrounding SOH and RUL estimation for EVs by reviewing published research papers from 2015 to 2024. The work presents the overall process of developing a data-driven model for SOH and RUL estimation. It covers the relationship between SOH and RUL, describes publicly available datasets, outlines data-preprocessing techniques, discusses model optimization strategies, and provides model descriptions. The review started with an examination of the relationship between SOH and RUL and their importance, followed by a review of existing datasets

and dataset preprocessing methods. It then investigates various data-driven methods and their optimization methods and concludes with a discussion on special-use cases and future research directions. Key findings from the review can be summarized as follows:

- The most used public datasets are NASA, CALCE, and Oxford, where data were collected from simulated conditions that represent real-life operational scenarios.
- In recent years, feature engineering and selection have become more prevalent in building lightweight and efficient data-driven models. In most studies, PCC was used to identify the most important features. In terms of model parameter optimization, PSO was the most popular method used by researchers due to its simplicity and convergence with global minima.
- Although machine-learning approaches are becoming outdated, new trends are emerging that integrate them with other data-driven methods in hybrid models and apply TF, which yields promising results.
- Though the RUL estimation is important, in recent years, the co-estimation of SOH and RUL has become popular instead of RUL estimation alone.

CRediT authorship contribution statement

Md Shahriar Nazim: Writing – original draft, Visualization, Formal analysis, Data curation. **Arbil Chakma:** Writing – original draft, Methodology, Formal analysis, Data curation, Conceptualization. **Md. Ibne Joha:** Writing – original draft, Visualization, Investigation. **Syed Samiul Alam:** Validation, Methodology, Investigation, Formal analysis, Data curation, Conceptualization. **Md Minhazur Rahman:** Writing – original draft, Validation. **Miftahul Khoir Shilahul Umam:** Writing – original draft, Visualization, Resources, Data curation. **Yeong Min Jang:** Supervision, Resources, Project administration, Funding acquisition, Formal analysis.

Declaration of competing interest

The authors declare that there is no conflict of interest in this paper.

Acknowledgments

This work was supported by the National Research Foundation of Korea (NRF) grant funded by the Korea Government (MSIT) (No. 2022R1A2C1007884).

References

[1] Z. Deng, X. Lin, J. Cai, X. Hu, Battery health estimation with degradation pattern recognition and transfer learning, J. Power Sources 525 (2022) 231027.
[2] N. Li, Y. Cao, X. Liu, Y. Zhang, R. Wang, L. Jiang, X.-P. Zhang, An improved modulation strategy for single-phase three-level neutral-point-clamped converter in critical conduction mode, J. Mod. Power Syst. Clean Energy 12 (3) (2024) 981–990.
[3] Y. Ma, Z. Wang, J. Gao, H. Chen, A novel method for remaining useful life of solid-state lithium-ion battery based on improved CNN and health indicators derivation, Mech. Syst. Signal Process. 220 (2024) 111646.
[4] Y. Liu, H. Chen, L. Yao, J. Ding, S. Chen, Z. Wang, A physics-guided approach for accurate battery SOH estimation using RCMHCRE and BatteryPINN, Adv. Eng. Informatics 65 (2025) 103211.
[5] Y. Xiang, W. Fan, J. Zhu, X. Wei, H. Dai, Semi-supervised deep learning for lithium-ion battery state-of-health estimation using dynamic discharge profiles, Cell Rep. Phys. Sci. 5 (1) (2024).
[6] J. Schmitt, I. Horstkötter, B. Bäker, State-of-health estimation by virtual experiments using recurrent decoder–encoder based lithium-ion digital battery twins trained on unstructured battery data, J. Energy Storage 58 (2023) 106335.
[7] G. Sun, Y. Liu, X. Liu, A method for estimating lithium-ion battery state of health based on physics-informed machine learning, J. Power Sources 627 (2025) 235767.
[8] M.S. Nazim, M.M. Rahman, M.I. Joha, Y.M. Jang, An RNN-CNN-based parallel hybrid approach for battery state of charge (SoC) estimation under various temperatures and discharging cycle considering noisy conditions, World Electr. Veh. J. 15 (12) (2024) 562.
[9] M.S. Nazim, Y.M. Jang, B. Chung, Machine learning based battery anomaly detection using empirical data, in: 2024 International Conference on Artificial Intelligence in Information and Communication, ICAIIC, IEEE, 2024, pp. 847–850.
[10] S. Ansari, M. Hannan, A. Ayob, M.G. Abdolrasol, M.A. Dar, Co-estimation of state of health and remaining useful life for lithium-ion batteries using a hybrid optimized framework, J. Energy Storage 105 (2025) 114711.
[11] Y. Zhan, X. Ren, S. Zhao, Z. Guo, Enhancing prediction of electron affinity and ionization energy in liquid organic electrolytes for lithium-ion batteries using machine learning, J. Power Sources 629 (2025) 235992.
[12] M. Elmahallawy, T. Elfouly, A. Alouani, A.M. Massoud, A comprehensive review of lithium-ion batteries modeling, and state of health and remaining useful lifetime prediction, Ieee Access 10 (2022) 119040–119070.
[13] J. Zhao, Y. Zhu, B. Zhang, M. Liu, J. Wang, C. Liu, X. Hao, Review of state estimation and remaining useful life prediction methods for lithium–ion batteries, Sustainability 15 (6) (2023) 5014.
[14] Y. Zhang, T. Wik, J. Bergström, C. Zou, State of health estimation for lithium-ion batteries under arbitrary usage using data-driven multimodel fusion, IEEE Trans. Transp. Electrification 10 (1) (2023) 1494–1507.
[15] M. Bosello, C. Falcomer, C. Rossi, G. Pau, To charge or to sell? EV pack useful life estimation via LSTMs, CNNs, and autoencoders, Energies 16 (6) (2023) 2837.
[16] P. Ren, Q. Jia, Q. Xu, Y. Li, F. Bi, J. Xu, S. Gao, Oil spill drift prediction enhanced by correcting numerically forecasted sea surface dynamic fields with adversarial temporal convolutional networks, IEEE Trans. Geosci. Remote Sens. (2025).
[17] M.I. Joha, M.M. Rahman, M.S. Nazim, Y.M. Jang, A secure IIoT environment that integrates AI-driven real-time short-term active and reactive load forecasting with anomaly detection: A real-world application, Sensors 24 (23) (2024) 7440.
[18] M.M. Rahman, M.I. Joha, M.S. Nazim, Y.M. Jang, Enhancing IoT-based environmental monitoring and power forecasting: A comparative analysis of AI models for real-time applications., Appl. Sci. (2076- 3417) 14 (24) (2024).
[19] M.A. Patil, P. Tagade, K.S. Hariharan, S.M. Kolake, T. Song, T. Yeo, S. Doo, A novel multistage support vector machine based approach for Li ion battery remaining useful life estimation, Appl. Energy 159 (2015) 285–297.
[20] C. Wang, Y. Chen, Unsupervised dynamic prognostics for abnormal degradation of lithium-ion battery, Appl. Energy 365 (2024) 123280.
[21] H. Tian, P. Qin, K. Li, Z. Zhao, A review of the state of health for lithium-ion batteries: Research status and suggestions, J. Clean. Prod. 261 (2020) 120813.
[22] H. Rauf, M. Khalid, N. Arshad, Machine learning in state of health and remaining useful life estimation: Theoretical and technological development in battery degradation modelling, Renew. Sustain. Energy Rev. 156 (2022) 111903.
[23] K. Song, D. Hu, Y. Tong, X. Yue, Remaining life prediction of lithium-ion batteries based on health management: A review, J. Energy Storage 57 (2023) 106193.
[24] E. Kim, M. Kim, J. Kim, J. Kim, J.-H. Park, K.-T. Kim, J.-H. Park, T. Kim, K. Min, Data-driven methods for predicting the state of health, state of charge, and remaining useful life of li-ion batteries: A comprehensive review, Int. J. Precis. Eng. Manuf. 24 (7) (2023) 1281–1304.
[25] T. Alsuwian, S. Ansari, M.A.A.M. Zainuri, A. Ayob, A. Hussain, M.H. Lipu, A.R. Alhawari, A. Almawgani, S. Almasabi, A.T. Hindi, A review of expert hybrid and co-estimation techniques for SOH and RUL estimation in battery management system with electric vehicle application, Expert Syst. Appl. (2024) 123123.
[26] Q. Li, R. Song, Y. Wei, A review of state-of-health estimation for lithium-ion battery packs, J. Energy Storage 118 (2025) 116078.
[27] D. Chen, W. Hong, X. Zhou, Transformer network for remaining useful life prediction of lithium-ion batteries, Ieee Access 10 (2022) 19621–19628.
[28] N. Xu, Y. Xie, Q. Liu, F. Yue, D. Zhao, A data-driven approach to state of health estimation and prediction for a lithium-ion battery pack of electric buses based on real-world data, Sensors 22 (15) (2022) 5762.
[29] S.W. Kim, K.-Y. Oh, S. Lee, Novel informed deep learning-based prognostics framework for on-board health monitoring of lithium-ion batteries, Appl. Energy 315 (2022) 119011.
[30] Y. Zhang, Q. Tang, Y. Zhang, J. Wang, U. Stimming, A.A. Lee, Identifying degradation patterns of lithium ion batteries from impedance spectroscopy using machine learning, Nat. Commun. 11 (1) (2020) 1706.
[31] A. Bracale, P. De Falco, L.P. Di Noia, R. Rizzo, Probabilistic state of health and remaining useful life prediction for li-ion batteries, in: 2021 IEEE Texas Power and Energy Conference, TPEC, 2021, pp. 1–6, http://dx.doi.org/10.1109/TPEC51183.2021.9384939.
[32] J.C. Chen, T.-L. Chen, W.-J. Liu, C. Cheng, M.-G. Li, Combining empirical mode decomposition and deep recurrent neural networks for predictive maintenance of lithium-ion battery, Adv. Eng. Informatics 50 (2021) 101405.

[33] Y. Chen, NASA lithium ion battery dataset, 2024, http://dx.doi.org/10.21227/p4st-2305.
[34] B. Bole, C. Kulkarni, M. Daigle, Randomized battery usage data set, NASA ames prognostics data repository. NASA ames research center, moffett field, CA, 2014.
[35] C. Birkl, Oxford battery degradation dataset 1, 2017.
[36] P.J. Kollmeyer, Panasonic 18650pf li-ion battery data, 2018, URL https://api.semanticscholar.org/CorpusID:116778898.
[37] S. Saxena, C. Hendricks, M. Pecht, Cycle life testing and modeling of graphite/LiCoO2 cells under different state of charge ranges, J. Power Sources 327 (2016) 394–400.
[38] G. Pozzato, A. Allam, S. Onori, Lithium-ion battery aging dataset based on electric vehicle real-driving profiles, Data Brief 41 (2022) 107995.
[39] M. Luh, T. Blank, Data for: Comprehensive battery aging dataset: Cycling, capacity and impedance fade measurements of a commercial lithium-ion NMC/C-SiO cell, 2024.
[40] N.A. Azhar, M.S.M. Pozi, A.M. Din, A. Jatowt, An investigation of SMOTE based methods for imbalanced datasets with data complexity analysis, IEEE Trans. Knowl. Data Eng. 35 (7) (2022) 6651–6672.
[41] S. Matharaarachchi, M. Domaratzki, S. Muthukumarana, Enhancing SMOTE for imbalanced data with abnormal minority instances, Mach. Learn. Appl. 18 (2024) 100597.
[42] Y. Ma, C. Shan, J. Gao, H. Chen, Multiple health indicators fusion-based health prognostic for lithium-ion battery using transfer learning and hybrid deep learning method, Reliab. Eng. Syst. Saf. 229 (2023) 108818.
[43] E. Kheirkhah-Rad, A. Parvareh, M. Moeini-Aghtaie, P. Dehghanian, A data-driven state-of-health estimation model for lithium-ion batteries using referenced-based charging time, IEEE Trans. Power Deliv. 38 (5) (2023) 3406–3416.
[44] H. Lipu, M. Hannan, A. Hussain, M. Saad, Optimal BP neural network algorithm for state of charge estimation of lithium-ion battery using PSO with PCA feature selection, J. Renew. Sustain. Energy 9 (6) (2017).
[45] E. Banguero, A. Correcher, Á. Pérez-Navarro, E. García, A. Aristizabal, Diagnosis of a battery energy storage system based on principal component analysis, Renew. Energy 146 (2020) 2438–2449.
[46] C. Mehta, A.V. Sant, P. Sharma, SVM-assisted ANN model with principal component analysis based dimensionality reduction for enhancing state-of-charge estimation in LiFePO4 batteries, E- Prime- Adv. Electr. Eng. Electron. Energy 8 (2024) 100596.
[47] C. Mehta, A.V. Sant, P. Sharma, Optimized ANN for LiFePO4 battery charge estimation using principal components based feature generation, Green Energy Intell. Transp. (2024) 100175.
[48] P.-Y. Lee, S. Kwon, D. Kang, I. Cho, J. Kim, Principle component analysis-based optimized feature extraction merged with nonlinear regression model for improved state-of-health prediction, J. Energy Storage 48 (2022) 104026.
[49] V. Fonti, E. Belitser, Feature selection using lasso, VU Amst. Res. Pap. Bus. Anal. 30 (2017) 1–25.
[50] J.Á. Antón, P.J. García-Nieto, E. García-Gonzalo, M.G. Vega, C.B. Viejo, Data-driven state-of-charge prediction of a storage cell using ABC/GBRT, ABC/MLP and LASSO machine learning techniques, J. Comput. Appl. Math. 433 (2023) 115305.
[51] R. Xiong, Y. Sun, C. Wang, J. Tian, X. Chen, H. Li, Q. Zhang, A data-driven method for extracting aging features to accurately predict the battery health, Energy Storage Mater. 57 (2023) 460–470.
[52] Y. Ma, M. Yao, H. Liu, Z. Tang, State of health estimation and remaining useful life prediction for lithium-ion batteries by improved particle swarm optimization-back propagation neural network, J. Energy Storage 52 (2022) 104750.
[53] Z. Mustaffa, M.H. Sulaiman, Battery remaining useful life estimation based on particle swarm optimization-neural network, Clean. Energy Syst. 9 (2024) 100151.
[54] C.G. Manriquez-Padilla, I. Cueva-Perez, A. Dominguez-Gonzalez, D.A. Elvira-Ortiz, A. Perez-Cruz, J.J. Saucedo-Dorantes, State of charge estimation model based on genetic algorithms and multivariate linear regression with applications in electric vehicles, Sensors 23 (6) (2023) 2924.
[55] J. Sun, J. Kainz, State of health estimation for lithium-ion batteries based on current interrupt method and genetic algorithm optimized back propagation neural network, J. Power Sources 591 (2024) 233842.
[56] A. Nefraoui, K. Kandoussi, M. Louzazni, A. Boutahar, R. Elotmani, A. Daya, Optimal battery state of charge parameter estimation and forecasting using non-linear autoregressive exogenous, Mater. Sci. Energy Technol. 6 (2023) 522–532.
[57] K.M. Brown, J.E. Dennis Jr., Derivative free analogues of the Levenberg-Marquardt and Gauss algorithms for nonlinear least squares approximation, Numer. Math. 18 (4) (1971) 289–297.
[58] R.A. Akpinar, S. Achanta, A. Fotouhi, H. Zhang, D.J. Auger, Battery temperature prediction in electric vehicles using Bayesian regularization, in: 2024 20th International Conference on Synthesis, Modeling, Analysis and Simulation Methods and Applications To Circuit Design, SMACD, IEEE, 2024, pp. 1–4.
[59] X. Shu, G. Li, J. Shen, Z. Lei, Z. Chen, Y. Liu, A uniform estimation framework for state of health of lithium-ion batteries considering feature extraction and parameters optimization, Energy 204 (2020) 117957.
[60] Y. Zhang, T. Wik, J. Bergström, M. Pecht, C. Zou, A machine learning-based framework for online prediction of battery ageing trajectory and lifetime using histogram data, J. Power Sources 526 (2022) 231110.
[61] S. Maleki, B. Ray, M.T. Hagh, Hybrid framework for predicting and forecasting state of health of lithium-ion batteries in electric vehicles, Sustain. Energy, Grids Networks 30 (2022) 100603.
[62] R. Li, J. Hong, H. Zhang, X. Chen, Data-driven battery state of health estimation based on interval capacity for real-world electric vehicles, Energy 257 (2022) 124771.
[63] S. Jafari, Y.-C. Byun, Prediction of the battery state using the digital twin framework based on the battery management system, IEEE Access 10 (2022) 124685–124696.
[64] Y. Khawaja, N. Shankar, I. Qiqieh, J. Alzubi, O. Alzubi, M. Nallakaruppan, S. Padmanaban, Battery management solutions for li-ion batteries based on artificial intelligence, Ain Shams Eng. J. (2023) 102213.
[65] E. Lelli, A. Musa, E. Batista, D.A. Misul, G. Belingardi, On-road experimental campaign for machine learning based state of health estimation of high-voltage batteries in electric vehicles, Energies 16 (12) (2023) 4639.
[66] W. Luo, A.U. Syed, J.R. Nicholls, S. Gray, An SVM-based health classifier for offline li-ion batteries by using EIS technology, J. Electrochem. Soc. 170 (3) (2023) 030532.
[67] S. Jafari, Y.-C. Byun, Optimizing battery RUL prediction of lithium-ion batteries based on harris hawk optimization approach using random forest and lightgbm, IEEE Access (2023).
[68] Y. Zhao, Z. Wang, Z. Sun, P. Liu, D. Cui, J. Deng, Data-driven lithium-ion battery degradation evaluation under overcharge cycling conditions, IEEE Trans. Power Electron. 38 (8) (2023) 10138–10150, http://dx.doi.org/10.1109/TPEL.2023.3280576.
[69] A. Ran, M. Cheng, S. Chen, Z. Liang, Z. Zhou, G. Zhou, F. Kang, X. Zhang, B. Li, G. Wei, Fast remaining capacity estimation for lithium-ion batteries based on short-time pulse test and Gaussian process regression, Energy & Environ. Mater. 6 (3) (2023) e12386.
[70] J. Wang, R. Zhao, Q.-A. Huang, J. Wang, Y. Fu, W. Li, Y. Bai, Y. Zhao, X. Li, J. Zhang, High-efficient prediction of state of health for lithium-ion battery based on AC impedance feature tuned with Gaussian process regression, J. Power Sources 561 (2023) 232737.
[71] S. Wang, J. Tang, B. Xiong, J. Fan, Y. Li, Q. Chen, C. Xie, Z. Wei, Comparison of techniques based on frequency response analysis for state of health estimation in lithium-ion batteries, Energy (2024) 132077.
[72] S. Wen, N. Lin, S. Huang, X. Li, Z. Wang, Z. Zhang, Lithium battery state of health estimation using real-world vehicle data and an interpretable hybrid framework, J. Energy Storage 96 (2024) 112623.
[73] X. Xia, Y. Chen, J. Shen, Y. Liu, Y. Zhang, Z. Chen, F. Wei, State of health estimation for lithium-ion batteries based on impedance feature selection and improved support vector regression, Energy 326 (2025) 136135.
[74] L. Prokhorenkova, G. Gusev, A. Vorobev, A.V. Dorogush, A. Gulin, CatBoost: unbiased boosting with categorical features, Adv. Neural Inf. Process. Syst. 31 (2018).
[75] J. Zhang, X. Ma, J. Zhang, D. Sun, X. Zhou, C. Mi, H. Wen, Insights into geospatial heterogeneity of landslide susceptibility based on the SHAP-XGBoost model, J. Environ. Manag. 332 (2023) 117357.
[76] Y. Deng, H. Ying, E. Jiaqiang, H. Zhu, K. Wei, J. Chen, F. Zhang, G. Liao, Feature parameter extraction and intelligent estimation of the State-of-Health of lithium-ion batteries, Energy 176 (2019) 91–102.
[77] X. Li, X. Shu, J. Shen, R. Xiao, W. Yan, Z. Chen, An on-board remaining useful life estimation algorithm for lithium-ion batteries of electric vehicles, Energies 10 (5) (2017) 691.
[78] H. Beltran, E. Sansano, M. Pecht, Machine learning techniques suitability to estimate the retained capacity in lithium-ion batteries from partial charge/discharge curves, J. Energy Storage 59 (2023) 106346.
[79] G. Crocioni, D. Pau, J.-M. Delorme, G. Gruosso, Li-ion batteries parameter estimation with tiny neural networks embedded on intelligent IoT microcontrollers, IEEE Access 8 (2020) 122135–122146.
[80] A. Rastegarpanah, J. Hathaway, R. Stolkin, Rapid model-free state of health estimation for end-of-first-life electric vehicle batteries using impedance spectroscopy, Energies 14 (9) (2021) 2597.
[81] J.-H. Lee, I.-S. Lee, Lithium battery SOH monitoring and an SOC estimation algorithm based on the SOH result, Energies 14 (15) (2021) 4506.
[82] L. Yao, J. Wen, S. Xu, J. Zheng, J. Hou, Z. Fang, Y. Xiao, State of health estimation based on the long short-term memory network using incremental capacity and transfer learning, Sensors 22 (20) (2022) 7835.
[83] J.-H. Lee, I.-S. Lee, Estimation of online state of charge and state of health based on neural network model banks using lithium batteries, Sensors 22 (15) (2022) 5536.
[84] J. Shi, A. Rivera, D. Wu, Battery health management using physics-informed machine learning: Online degradation modeling and remaining useful life prediction, Mech. Syst. Signal Process. 179 (2022) 109347.

[85] F. Heinrich, M. Pruckner, Virtual experiments for battery state of health estimation based on neural networks and in-vehicle data, J. Energy Storage 48 (2022) 103856.
[86] X. Chen, J. Choi, X. Li, Machine learning a million cycles as 2D images from practical batteries for electric vehicle applications, ACS Energy Lett. 7 (12) (2022) 4362–4367.
[87] A.G. Li, W. Wang, A.C. West, M. Preindl, Health and performance diagnostics in li-ion batteries with pulse-injection-aided machine learning, Appl. Energy 315 (2022) 119005.
[88] P. Ren, S. Wang, X. Chen, H. Zhou, C. Fernandez, D.-I. Stroe, A novel multiple training-scale dynamic adaptive cuckoo search optimized long short-term memory neural network and multi-dimensional health indicators acquisition strategy for whole life cycle health evaluation of lithium-ion batteries, Electrochim. Acta 435 (2022) 141404.
[89] H. Sheng, Y. Zhou, L. Bai, L. Shi, Transfer state of health estimation based on cross-manifold embedding, J. Energy Storage 47 (2022) 103555.
[90] Z. Zhang, Y. Jeong, J. Jang, C.-G. Lee, A pattern-driven stochastic degradation model for the prediction of remaining useful life of rechargeable batteries, IEEE Trans. Ind. Informatics 18 (12) (2022) 8586–8594, http://dx.doi.org/10.1109/TII.2022.3155597.
[91] H. Zhao, Z. Chen, X. Shu, J. Shen, Z. Lei, Y. Zhang, State of health estimation for lithium-ion batteries based on hybrid attention and deep learning, Reliab. Eng. Syst. Saf. 232 (2023) 109066.
[92] Z. Bao, J. Jiang, C. Zhu, M. Gao, A new hybrid neural network method for state-of-health estimation of lithium-ion battery, Energies 15 (12) (2022) 4399.
[93] P. Mei, H.R. Karimi, F. Chen, S. Yang, C. Huang, S. Qiu, A learning-based vehicle-cloud collaboration approach for joint estimation of state-of-energy and state-of-health, Sensors 22 (23) (2022) 9474.
[94] T. Bai, H. Wang, Convolutional transformer-based multi-view information perception framework for lithium-ion battery state-of-health estimation, IEEE Trans. Instrum. Meas. (2023).
[95] M. Lin, Y. You, J. Meng, W. Wang, J. Wu, D.-I. Stroe, Lithium-ion batteries SOH estimation with multimodal multilinear feature fusion, IEEE Trans. Energy Convers. 38 (4) (2023) 2959–2968.
[96] L. Zhou, Z. Zhang, P. Liu, Y. Zhao, D. Cui, Z. Wang, Data-driven battery state-of-health estimation and prediction using IC based features and coupled model, J. Energy Storage 72 (2023) 108413.
[97] I. Jorge, T. Mesbahi, A. Samet, R. Boné, Time series feature extraction for lithium-ion batteries state-of-health prediction, J. Energy Storage 59 (2023) 106436.
[98] J. Schmitt, I. Horstkötter, B. Bäker, State-of-health estimation by virtual experiments using recurrent decoder–encoder based lithium-ion digital battery twins trained on unstructured battery data, J. Energy Storage 58 (2023) 106335.
[99] K.D. Rao, N.V. Anand, T.K.S. Pandraju, F. Alsaif, T.S. Ustun, Optimally tuned gated recurrent unit neural network-based state of health estimation scheme for lithium ion batteries, IEEE Access (2024).
[100] X. Liu, Z. Gao, J. Tian, Z. Wei, C. Fang, P. Wang, State of health estimation for lithium-ion batteries using voltage curves reconstruction by conditional generative adversarial network, IEEE Trans. Transp. Electrification (2024).
[101] Y. Ma, J. Li, Y. Hu, H. Chen, A battery prognostics and health management technique based on knee critical interval and linear complexity self-attention transformer in electric vehicles, IEEE Trans. Intell. Transp. Syst. (2024).
[102] B. Chinomona, C. Chung, L.-K. Chang, W.-C. Su, M.-C. Tsai, Long short-term memory approach to estimate battery remaining useful life using partial data, Ieee Access 8 (2020) 165419–165431.
[103] J. Schmitt, I. Horstkötter, B. Bäker, State-of-health estimation by virtual experiments using recurrent decoder–encoder based lithium-ion digital battery twins trained on unstructured battery data, J. Energy Storage 58 (2023) 106335.
[104] G. Lyu, H. Zhang, Q. Miao, Parallel state fusion LSTM-based early-cycle stage lithium-ion battery RUL prediction under Lebesgue sampling framework, Reliab. Eng. Syst. Saf. 236 (2023) 109315.
[105] J. Hu, L. Weng, Z. Gao, B. Yang, State of health estimation and remaining useful life prediction of electric vehicles based on real-world driving and charging data, IEEE Trans. Veh. Technol. 72 (1) (2023) 382–394, http://dx.doi.org/10.1109/TVT.2022.3203013.
[106] K. Cho, Learning phrase representations using RNN encoder-decoder for statistical machine translation, 2014, arXiv preprint arXiv:1406.1078.
[107] Z. Chen, H. Zhao, Y. Zhang, S. Shen, J. Shen, Y. Liu, State of health estimation for lithium-ion batteries based on temperature prediction and gated recurrent unit neural network, J. Power Sources 521 (2022) 230892.
[108] Y. LeCun, Y. Bengio, G. Hinton, Deep learning, Nature 521 (7553) (2015) 436–444.
[109] Y. Fan, F. Xiao, C. Li, G. Yang, X. Tang, A novel deep learning framework for state of health estimation of lithium-ion battery, J. Energy Storage 32 (2020) 101741.
[110] C. Qian, H. Guan, B. Xu, Q. Xia, B. Sun, Y. Ren, Z. Wang, A CNN-SAM-LSTM hybrid neural network for multi-state estimation of lithium-ion batteries under dynamical operating conditions, Energy 294 (2024) 130764.
[111] M. Lin, L. Ke, W. Wang, J. Meng, Y. Guan, J. Wu, Health prognosis via feature optimization and convolutional neural network for lithium-ion batteries, Eng. Appl. Artif. Intell. 133 (2024) 108666.
[112] Q. Xu, M. Wu, E. Khoo, Z. Chen, X. Li, A hybrid ensemble deep learning approach for early prediction of battery remaining useful life, IEEE/ CAA J. Autom. Sin. 10 (1) (2023) 177–187.
[113] Z. Fei, Z. Zhang, K.-L. Tsui, Deep learning powered online battery health estimation considering multitimescale aging dynamics and partial charging information, IEEE Trans. Transp. Electrification 10 (1) (2023) 42–54.
[114] X. Xiong, Y. Wang, C. Jiang, X. Zhang, H. Xiang, Z. Chen, End-to-end deep learning powered battery state of health estimation considering multi-neighboring incomplete charging data, Energy 292 (2024) 130495.
[115] S. Liu, C. Wu, J. Huang, Y. Zhang, M. Ye, Y. Huang, Blockchain-based interpretable electric vehicle battery life prediction in IoV, IEEE Internet Things J. (2023).
[116] J. Couture, X. Lin, Image-and health indicator-based transfer learning hybridization for battery RUL prediction, Eng. Appl. Artif. Intell. 114 (2022) 105120.
[117] A. Rastegarpanah, M.E. Asif, R. Stolkin, Hybrid neural networks for enhanced predictions of remaining useful life in lithium-ion batteries, Batteries 10 (3) (2024) 106.
[118] S. Cho, D. Han, J. Kim, J. Kim, State of health estimation embedded with hardware accelerator based on long short-term memory combined with Bayesian optimization considering extracted health indicator in charging conditions, J. Energy Storage 90 (2024) 111897.
[119] M. Ansari, S.B. Torrisi, A. Trewartha, S. Sun, History-agnostic battery degradation inference, J. Energy Storage 81 (2024) 110279.
[120] C. Zhang, L. Tu, Z. Yang, B. Du, Z. Zhou, J. Wu, L. Chen, A CMMOG-based lithium-battery SOH estimation method using multi-task learning framework, J. Energy Storage 107 (2025) 114884.
[121] S. Li, Z. Jiang, Z. Zhu, W. Jiang, Y. Ma, X. Sang, S. Yang, A framework of joint SOC and SOH estimation for lithium-ion batteries: Using BiLSTM as a battery model, J. Power Sources 635 (2025) 236342.
[122] Q. Zhu, X. Zeng, Z. Wang, Z. Zhao, L. Zhang, J. Wang, CTBANet: A new method for state of health estimation of lithium-ion batteries, J. Energy Storage 117 (2025) 116134.
[123] H. Sheng, Y. Zhou, L. Bai, L. Shi, Transfer state of health estimation based on cross-manifold embedding, J. Energy Storage 47 (2022) 103555.
[124] Z. Chen, L. Chen, W. Shen, K. Xu, Remaining useful life prediction of lithium-ion battery via a sequence decomposition and deep learning integrated approach, IEEE Trans. Veh. Technol. 71 (2) (2021) 1466–1479.
[125] Z. Xu, Y. Guo, J.H. Saleh, A physics-informed dynamic deep autoencoder for accurate state-of-health prediction of lithium-ion battery, Neural Comput. Appl. 34 (18) (2022) 15997–16017.
[126] T. Hofmann, J. Hamar, M. Rogge, C. Zoerr, S. Erhard, J.P. Schmidt, Physics-informed neural networks for state of health estimation in lithium-ion batteries, J. Electrochem. Soc. 170 (9) (2023) 090524.
[127] S. Kohtz, Y. Xu, Z. Zheng, P. Wang, Physics-informed machine learning model for battery state of health prognostics using partial charging segments, Mech. Syst. Signal Process. 172 (2022) 109002.
[128] H. Pan, Z. Lü, H. Wang, H. Wei, L. Chen, Novel battery state-of-health online estimation method using multiple health indicators and an extreme learning machine, Energy 160 (2018) 466–477.
[129] N. Li, F. He, W. Ma, R. Wang, L. Jiang, X. Zhang, An indirect state-of-health estimation method based on improved genetic and back propagation for online lithium-ion battery used in electric vehicles, IEEE Trans. Veh. Technol. 71 (12) (2022) 12682–12690, http://dx.doi.org/10.1109/TVT.2022.3196225.
[130] Y. Jiang, Y. Ke, F. Yang, J. Ji, W. Peng, State of health estimation for second-life lithium-ion batteries in energy storage system with partial charging-discharging workloads, IEEE Trans. Ind. Electron. (2024).
[131] C. Du, R. Qi, Z. Ren, D. Xiao, Research on state-of-health estimation for lithium-ion batteries based on the charging phase, Energies 16 (3) (2023) 1420.
[132] J. Wu, L. Fang, G. Dong, M. Lin, State of health estimation of lithium-ion battery with improved radial basis function neural network, Energy 262 (2023) 125380.
[133] Z. Bao, J. Nie, H. Lin, J. Jiang, Z. He, M. Gao, A global–local context embedding learning based sequence-free framework for state of health estimation of lithium-ion battery, Energy 282 (2023) 128306.
[134] A. Bonfitto, A method for the combined estimation of battery state of charge and state of health based on artificial neural networks, Energies 13 (10) (2020) 2548.
[135] E. Ezemobi, M. Silvagni, A. Mozaffari, A. Tonoli, A. Khajepour, State of health estimation of lithium-ion batteries in electric vehicles under dynamic load conditions, Energies 15 (3) (2022) 1234.
[136] A. Naha, S. Han, S. Agarwal, A. Guha, A. Khandelwal, P. Tagade, K.S. Hariharan, S.M. Kolake, J. Yoon, B. Oh, An incremental voltage difference based technique for online state of health estimation of li-ion batteries, Sci. Rep. 10 (1) (2020) 9526.
[137] S. Ansari, A. Ayob, M.S. Hossain Lipu, A. Hussain, M.H.M. Saad, Multi-channel profile based artificial neural network approach for remaining useful life prediction of electric vehicle lithium-ion batteries, Energies 14 (22) (2021) 7521.

[138] J. Obregon, Y.-R. Han, C.W. Ho, D. Mouraliraman, C.W. Lee, J.-Y. Jung, Convolutional autoencoder-based SOH estimation of lithium-ion batteries using electrochemical impedance spectroscopy, J. Energy Storage 60 (2023) 106680.
[139] J.N. Njoku, C.I. Nwakanma, D.-S. Kim, Explainable data-driven digital twins for predicting battery states in electric vehicles, IEEE Access 12 (2024) 83480–83501.
[140] X. Lv, Y. Cheng, S. Ma, H. Jiang, State of health estimation method based on real data of electric vehicles using federated learning, Int. J. Electrochem. Sci. 19 (8) (2024) 100591.
[141] M. Lin, D. Wu, S. Chen, J. Meng, W. Wang, J. Wu, Battery health prognosis based on sliding window sampling of charging curves and independently recurrent neural network, IEEE Trans. Instrum. Meas. (2024).
[142] C. Lin, L. Wu, X. Tuo, C. Liu, W. Zhang, Z. Huang, G. Zhang, A lightweight two-stage physics-informed neural network for soh estimation of lithium-ion batteries with different chemistries, J. Energy Chem. 105 (2025) 261–279.
[143] J. Zhao, H. Ling, J. Liu, J. Wang, A.F. Burke, Y. Lian, Machine learning for predicting battery capacity for electric vehicles, ETransportation 15 (2023) 100214.
[144] X. Cui, T. Hu, State of health diagnosis and remaining useful life prediction for lithium-ion battery based on data model fusion method, IEEE Access 8 (2020) 207298–207307.
[145] S. Bamati, H. Chaoui, Lithium-ion batteries long horizon health prognostic using machine learning, IEEE Trans. Energy Convers. 37 (2) (2021) 1176–1186.
[146] P. Li, Z. Zhang, R. Grosu, Z. Deng, J. Hou, Y. Rong, R. Wu, An end-to-end neural network framework for state-of-health estimation and remaining useful life prediction of electric vehicle lithium batteries, Renew. Sustain. Energy Rev. 156 (2022) 111843.
[147] B. Ma, S. Yang, L. Zhang, W. Wang, S. Chen, X. Yang, H. Xie, H. Yu, H. Wang, X. Liu, Remaining useful life and state of health prediction for lithium batteries based on differential thermal voltammetry and a deep-learning model, J. Power Sources 548 (2022) 232030.
[148] B. Chen, Y. Liu, B. Xiao, A novel hybrid neural network-based SOH and RUL estimation method for lithium-ion batteries, J. Energy Storage 98 (2024) 113074.
[149] J. Qu, Y. Wang, R. Zheng, M. Li, D. Zhang, A novel sequential estimation framework for battery state of health and remaining useful life based on sparse and limited data, J. Energy Storage 99 (2024) 113086.
[150] R. Zheng, B. Yang, Y. Qian, H. Li, D. Gao, L. Jiang, Joint SOH and RUL estimation for lithium-ion batteries via optimal deep belief network with Bayesian algorithm, J. Energy Storage 114 (2025) 115891.
[151] Y. Li, X. Qin, M. Chai, H. Wu, F. Zhang, F. Jiang, C. Wen, SOH evaluation and RUL estimation of lithium-ion batteries based on MC-CNN-TimesNet model, Reliab. Eng. Syst. Saf. (2025) 111125.
[152] Z. Jia, Z. Li, Z. Wang, Z. Liu, C.-m. Vong, Joint prediction of SOH and RUL for lithium batteries considering capacity self recovery and model drift, IEEE Internet Things J. (2025).
[153] M. Wei, M. Ye, Q. Wang, J.P. Twajamahoro, et al., Remaining useful life prediction of lithium-ion batteries based on stacked autoencoder and gaussian mixture regression, J. Energy Storage 47 (2022) 103558.
[154] S.K. Rahimian, Y. Tang, A practical data-driven battery state-of-health estimation for electric vehicles, IEEE Trans. Ind. Electron. 70 (2) (2022) 1973–1982.
[155] H. Beltran, E. Sansano, M. Pecht, Machine learning techniques suitability to estimate the retained capacity in lithium-ion batteries from partial charge/discharge curves, J. Energy Storage 59 (2023) 106346.
[156] J. Wu, H. Su, J. Meng, M. Lin, State of health estimation for lithium-ion battery via recursive feature elimination on partial charging curves, IEEE J. Emerg. Sel. Top. Power Electron. 11 (1) (2022) 131–142.
[157] X. Feng, C. Weng, X. He, X. Han, L. Lu, D. Ren, M. Ouyang, Online state-of-health estimation for li-ion battery using partial charging segment based on support vector machine, IEEE Trans. Veh. Technol. 68 (9) (2019) 8583–8592.
[158] J. Obregon, Y.-R. Han, C.W. Ho, D. Mouraliraman, C.W. Lee, J.-Y. Jung, Convolutional autoencoder-based SOH estimation of lithium-ion batteries using electrochemical impedance spectroscopy, J. Energy Storage 60 (2023) 106680.
[159] C. Zhu, M. Gao, Z. He, H. Wu, C. Sun, Z. Zhang, Z. Bao, State of health prediction for li-ion batteries with end-to-end deep learning, J. Energy Storage 65 (2023) 107218.
[160] J. Qiao, X. Liu, Z. Chen, Prediction of the remaining useful life of lithium-ion batteries based on empirical mode decomposition and deep neural networks, IEEE Access 8 (2020) 42760–42767.
[161] P. Venugopal, State-of-health estimation of li-ion batteries in electric vehicle using indrnn under variable load condition, Energies 12 (22) (2019) 4338.
[162] L. Song, K. Zhang, T. Liang, X. Han, Y. Zhang, Intelligent state of health estimation for lithium-ion battery pack based on big data analysis, J. Energy Storage 32 (2020) 101836.
[163] F. Heinrich, M. Pruckner, Virtual experiments for battery state of health estimation based on neural networks and in-vehicle data, J. Energy Storage 48 (2022) 103856.
[164] S.B. Shuvo, S.S. Alam, S.U. Ayman, A. Chakma, P.D. Barua, U.R. Acharya, NRC-Net: Automated noise robust cardio net for detecting valvular cardiac diseases using optimum transformation method with heart sound signals, Biomed. Signal Process. Control. 86 (2023) 105272.
[165] O.O. Medaiyese, M. Ezuma, A.P. Lauf, I. Guvenc, Wavelet transform analytics for RF-based UAV detection and identification system using machine learning, Pervasive Mob. Comput. 82 (2022) 101569.
[166] D. Shi, J. Zhao, Z. Wang, H. Zhao, C. Eze, J. Wang, Y. Lian, A.F. Burke, Cloud-based deep learning for co-estimation of battery state of charge and state of health, Energies 16 (9) (2023) 3855.
[167] M. Cao, W. Chen, Y. Ma, H. Huang, S. Luo, C. Zhang, Cross-linked K2Ti4O9 nanoribbon arrays with superior rate capability and cyclability for lithium-ion batteries, Mater. Lett. 279 (2020) 128495.
[168] X. Chen, S. Wei, J. Wang, F. Tong, T. Söhnel, G.I. Waterhouse, W. Zhang, J. Kennedy, M.P. Taylor, Lithium insertion/extraction mechanism in Mg2Sn anode for lithium-ion batteries, Intermetallics 169 (2024) 108306.
[169] F. Wang, Z. Zhao, Z. Zhai, Z. Shang, R. Yan, X. Chen, Explainability-driven model improvement for SOH estimation of lithium-ion battery, Reliab. Eng. Syst. Saf. 232 (2023) 109046.
[170] Y. Fu, M. Dong, L. Zhou, C. Li, F.R. Yu, N. Cheng, A distributed incentive mechanism to balance demand and communication overhead for multiple federated learning tasks in IoV, IEEE Internet Things J. (2024).